SANYO

FILE NO.

SERVICE MANUAL

PDP TV

PDP-32XS8DA

PRODUCT CODE No.
1 682 344 42: CCIR DVB-T
1 682 345 41 NEW OTA VERSION

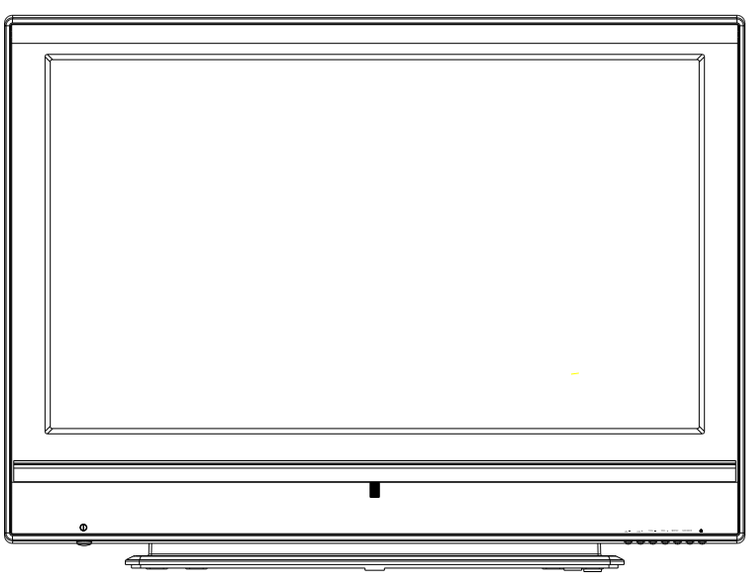

REFERENCE No.:SM0915038

CONTENTS

Safety precautions…… 1
Alignment instructions …… 3
Method of software upgrading…… 9
Working principle analysis of the unit…… 11
Block diagram…… 12
IC block diagram…… 13
Wiring diagram …… 18
Troubleshooting guide …… 19
Schematic diagram…… 24
APPENDIX-A: Assembly list
APPENDIX-B: Exploded View
Removing or Installing the Stand
Wall mounting instructions

Note: This maintenance manual is intended only for the reference of the maintenance people. Please pay attention to the following points before carrying out the maintenance work.

Safety Precautions

Please read the “Points for attention for the Maintenance & Repair of PDP” and “Criterion for Identifying the Defects on Screen” as below, before inspecting and adjusting the TV set.

1. “Points for attention for the Maintenance & Repair of PDP”

To avoid possible danger, damage or jeopardy to health and to prevent PDP screen from new damage, the maintenance people must read the following carefully. If they ignore the following warnings, there will be deathful risks:

1.1 Screens vary from one model to another and therefore not interchangeable. Be sure to use the same type of screen in the replacement.

1.2 The operation voltage is approximately 350V for PDP module (including screen, driving circuit, logic circuit and power module). If you want to conduct maintenance work on PDP module when the set is in normal operation or just after the power is off, you must take proper measures to avoid electric shock and never have direct contact or touch with the circuitry of the working module or metal parts. That’s because within a short time relatively high voltage still remains on the capacitor of the driving part even after the power is off. Make sure to begin relevant maintenance operation at least one minute after the power is off.

1.3 Don’t apply on the module any power supply that is higher than the specification. If the power supply used deviates from the value given in the specification, there might be a possibility of leading to fire or damage to the module.

1.4 Never have operation or mounting work under unsuitable environment such as areas in the vicinity of water – bathroom, laundry, water chute of kitchen – sources of fire, heat-radiation parts or direct exposure to sunlight. Otherwise there will be kickbacks.

1.5 In case foreign substances such as water, liquid, metal slices or others fall into the module carelessly power must be cut off immediately. Keep the module as it is and do not move anything on the module. Otherwise it might be possible to contact the high voltage or cause shock short circuit so that it may lead to fire or electric shock.

1.6 If there is smoke, abnormal smell or sound from the module, please cut the power off immediately. Likewise in case the screen doesn’t work when the power is on or during the operation, please also cut off the power at once. No more operation in this case.

1.7 Do not remove or plug its connection wire when the module is in operation or right after the power is off. That’s because there remains a relatively high voltage on the capacitor of the driving circuit. If there is a need to remove or plug in the connection wire, please wait at least one minute after the power is off.

1.8 Considering the module has a glass faceplate, please avoid extrusion by external force lest it should cause glass breakage that may get people injured. Two people are needed in cooperation to move this module lest contingency takes place.

1.9 The complete TV set is designed on the basis of full consideration of thermal dissipation by convection, with the round hole on the top for heat emission. To avoid overheat, please do not have any covering on the hole during normal operation and never put it in the place where the space is narrow and in bad ventilation.

1.10 There is quite a number of circuits in PDP that are integrated ones. Please be on guard against

static electricity. During maintenance operation be sure to cover yourself with anti-static bag and before operation make sure to have it sufficiently grounded.

1.11 There are a big number of connection wires distributed around the screen. Please take care not to touch or scuff them during maintenance or removing the screen, because once they are damaged the screen will fail to work and it's not possible to repair it.

If the connection wires, connectors or components fixed by the thermotropic glue need to disengage when service, please soak the thermotropic glue into the alcohol and then pull them out in case of damage.

1.12 Connector for the circuit board of the screen part is relatively fine and delicate. Please take care in the replacement operation lest it should get damaged.

1.13 Special care must be taken during transportation and handling because strenuous vibration could lead to screen glass breakage or damage on the driving circuitry. Be sure to use a strong outer case to pack it up before transportation or handling.

1.14 Please put it for storage in an environment in which the conditions are under control so as to prevent the temperature and humidity from exceeding the scope stipulated in the specification. For prolonged storage please cover it with anti-moisture bag and have them piled and stored in one place. The environmental conditions are tabulated as below:

Temperature	Scope for operation	0~50centigrade
	Scope for storage	-15~60centigrade
Humidity	Scope for operation	20%~80%
	Scope for storage	20%~80%

1.15 If a fixed picture is displayed for a long time, difference in its brightness and color may occur compared with movable pictures. But it doesn't show any problem and the reason is that there is reduced density of fluorescent powder in the former. On the other hand, even if changes take place in the picture, it can keep its brightness for a period of time (several minutes). It's a feature inherent with plasma and it's not abnormal. However please try as much as possible to avoid showing a still picture of high brightness for a long time during operation.

1.16 As a digitalized display devise, this module is provided with error diffusion technology and the gray scale and false enhancement of contour can be displayed by reusing of sub-field. As compared with cathode ray tube, it can be found in the moving picture that at the brim of the face of a person there are some wrong colors.

1.17 During the display of graph (indicating the gradual change in brightness horizontally or vertically) resulting from gray scale test it can be found that the brightness for the two adjacent levels is uneven. This is caused by the reuse of sub-field, the display of load rectification and the electrolysis.

1.18 The screen front plate is of glass. Please make sure that the screen has been put in place during erection. If it is not in place before the erection begins it may lead to screen crack or breakage.

1.19 Make sure the screw used in the mounting of the screen is of the original specs lest it should cause damage to the screen due to mismatch. Special care should be taken not to use too long or too big screw.

1.20 Care must be taken to guard against dust during assembling or dismantling, especially to avoid dirt from falling in between the screen and the glass lest it should harm the receiving and viewing

effect.

1.21 There is piece of insulator stuck on the rear chassis corresponding to the power supply board. It is used to isolate the cool part from the hot part. Please take care to keep it intact lest it should become a potential safety trouble.

1.22 In addition to plasma screen, the glass is a part of high value. It has such functions as anti-radiation, adjustment of color temperature etc. Please handle it carefully.

Alignment instructions

1. Test equipment

VG-848 (YPbPr,VGA signal generator)

VG-849 (HDMI signal generator)

CA100 (white balancer)

2. Power test

Connect data processing board, power board and IR board according the wiring diagram, connect the power and press “standby” button to turn on the TV.

a) Test the pin voltage of X802, the data are shown in table1:

Table1 voltage data of X802

X802	Pin1	2	3	4	5, 6	7, 8	9	10	11
Voltage	8.55~9.45V	0	4.85~5.35V	0	11.4~12.6V	0	4.85~5.35V	0	>2.5V

b) Test the pin voltage of XV03, the data are shown in table2:

Table2 voltage data of XV03

XV03	Pin1, 2	3, 4, 5
Voltage	23.8~25.2V	0

c) Test the pin voltage of X101, the data are shown in table3:

Table3 voltage data of X101

X101	Pin1	2
Voltage	31.4~32.6V	0

Note: the above data are for 42” 50” PDP; the below data are for 32” PDP:

d) Test the pin voltage of X802, the data are shown in table4:

Table4 voltage data of X802

X802	Pin1	2, 3	4	5	6, 7	8, 9	10	11	12	13, 14	15
Voltage	NC	>2.5 V	NC	>2.5 V	0	15.5 V~16.7V	0	8.8 V~9.35 V	0	4.85 V~5.35 V	0

3. Alignment flow-chart

The alignment flow-chart is shown as fig-1

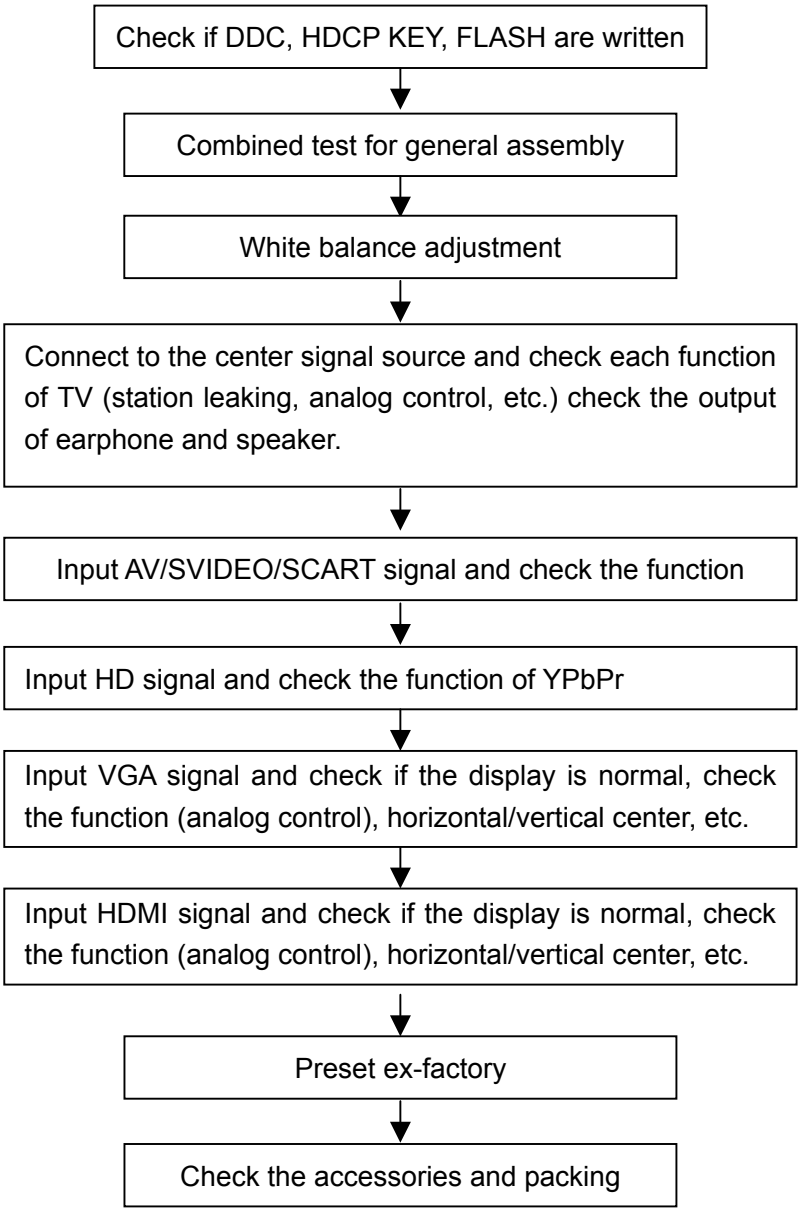

Fig-1 adjustment flow-chart

4. Adjustment instruction

4.1 Unit adjustments

4.1.1Connect all the boards according to wiring diagram, then power on and observe the display.

4.1.2 Method for entering factory menu:

a) Press “SOURCE”, “2”, “5”, ”8” and “0” in turn to enter factory menu;
b) Press “CH+” and “CH-” to move the cursor to the adjustment page of the level one factory menu, then press ”OK” to enter;
c) Press “CH+” and “CH-” to move the cursor up and down;
d) Press “VOL-” and “VOL+” to adjust the item when the cursor move to a certain adjust item;
e) Press “MENU” to exit to the previous factory menu;
f) Press “EXIT” to exit the factory menu at any situation;
g) Press “OK” to enter the sub factory menu;
h) **ADC ADJUST**, ADC correction of VGA, Component channel;

i) **W/B ADJUST**, white balance adjustment;
j) **POWER Mode**, set the turn-on modes. Standby---standby when power on; Mem---memory; ForceOn---power on; ForceOn can be used for aging; set the “power mode” to “Standby” when preset ex-factory unless the client appointed it;
k) **ISP Mode**, ON---soft upgrading through VGA port with ISP device, OFF---DDC function of VGA; the setting will not be memory and will be “OFF” when power on again;
l) **REST ALL**, initialization of the factory and user data; after this item is confirm, the unit will restart and display the guiding image.
m) **Factory Data Reset**, factory data initialization (including white balance adjustment, ADC correction and other adjusted data);
n) **Factory Channel Preset**, preset the factory channel; please connect to the center signal source when operating; the present digital frequency is CH28 (529.5MHz), CH33 (564.5MHz) for Australia and CH45 (666MHz) for UK, if the signal changes, perform “DTV manual search” in “Channel” menu and the operation needs 15s or so.
o) **MST Debug**, the default is OFF. OFF---RS232 should match the design criterion; ON--- it should be convenient for using exploitation tool to adjust. The setting will not be memory and will be “OFF” when power on again;
p) **SSC Adjust**, adjust the frequency spectrum expand, it will be preset and doesn’t need adjust.
q) **AUDIO Curve**, adjust the sound curve, it will be preset and doesn’t need adjust.
r) **Picture Mode**, set the picture values of each channel. Normally, they are preset and needn’t adjust.
s) **Backlight**: the default value is 100 and needn’t to adjust normally.
t) **RFAGC**: it will be preset and prepare for adjustment later.
u) There is data in EEPROM after software upgrade, please perform Reset All before the first adjustment.

4.2 ADC correction

4.2.1ADC correction in VGA channel

a) Switch to VGA channel.
b) Press” SOURCE”, then press “2, 5, 8, 0” in turn to enter the level one factory menu.
c) Move the cursor to “ADC ADJUST” and press OK to enter the sub-menu.
d) Input VGA signal (VG-848 Timing:856(1024x768/60Hz), Pattern:920 Gray 8 step(H)). Move the cursor to “mode”, press CH+ or CH- to select “RGB”, move the cursor to “AUTO ADC” and press OK to adjust automatically till complete.

4.2.2 ADC correction in YPbPr channel

a) Switch to YPbPr channel.
b) Press” SOURCE”, then press “2, 5, 8, 0” in turn to enter the level one factory menu.
c) Move the cursor to “ADC ADJUST” and press OK to enter the sub-menu.
d) Input YPbPr signal (VG848 Timing:968(483P), Pattern:918 75% Color Bar). Move the cursor to “mode”, press CH+ or CH- to select “YPbPr(HD)”, move the cursor to “AUTO ADC” and press ENTER to adjust automatically till complete.
e) Input YPbPr signal (VG848 Timing:968(483P), Pattern:918 75% Color Bar). Move the cursor to “mode”, press CH+ or CH- to select “YPbPr(SD)”, move the cursor to “AUTO ADC” and press ENTER to adjust automatically till complete.

4.3 White balance adjustment

For NEC, the default of color temperature of COOL is 11000K and the coordinate is (274, 293);

color temperature of NORMAL is 9400K and the coordinate is (286,288), color temperature of WARM is 7200K and the coordinate is (303,319). Each channel can be adjusted separately, “copy all” is that copy the data of present channel to all the channels.

For other users, the color coordinates are cool 12000K (272,278), normal 9300K (285,293), warm 6300K (313,329); “copy all” is that copy the data of present channel to all the channels.

4.3.1 Adjustment steps (NEC for example)

Before the white balance adjustment, please let the unit working at least 30 minutes and at a stable situation, use BBY channel of the white balancer CA100.

a) Switch to HDMI channel and select Dynamic mode;
b) Press” SOURCE”, then press “2, 5, 8, 0” in turn to enter the level one factory menu.
c) Move the cursor to “W/B ADJUST” and press OK to enter the sub-menu.
d) Input DVI/HDMI signal 480i/60Hz 16 step Gray (VG848\VG849\K8256). Move the cursor to “mode”, press CH+ or CH- to select “HDMI” or other HDMI channel, move the cursor to “temperature” and press CH+ or CH- to select “COOL”.
e) Adjust R-GAIN, G-GAIN, B-GAIN and let the color coordinate of the fourteenth scale be (274,293), adjust G-GAIN slightly, about 2-4 values. (test the right third step for nonsaturation, test the thirteenth step if the right two steps are saturate).
f) Adjust R-OFFSET, G-OFFSET, B-OFFSET and let the color coordinate of the fourth scale be (274,293). Adjust them slightly.
g) When adjusting, please keep the color temperature of high light to be X=274±10, Y=293±10 and the low light to be X=274±10, Y=293±10.
h) Move the cursor to “COPY ALL” and copy the data to the other channels.
i) Check if the color temperature of HDMI NORMAL is up to the mustard (low light acceptable error:±15, high light acceptable error:±15), if not, adjust R-GAIN/ B-GAIN/ R-OFF/ B-OFF.
j) Check the color temperature of COOL, NORMAL and WARM of other channels (ANALOGTV, DVB-T, Video, YPbPr, VGA), if they are not up to the mustard then adjust and store the data separately.
k) The reference of adjustment rule is below:
   B gun: lower B gun to increase X, Y coordinate data, while raise B gun to decrease the data.
   R gun: raise R gun to increase X coordinate data, while lower R gun to decrease the data; (R gun adjustment will affect X and Lv slightly).
   G gun: raise G gun to increase Y coordinate data, while lower G gun to decrease the data; (G gun adjustment will affect Y and Lv greatly).
l) Perform “Copy All” of Cool\Normal\Warm .

5. Performance check

5.1 TV function

Connect RF to the center signal source, enter Channel menu → auto search, check if there are channels be skipped, check if the picture and speaker are normal.

5.2 AV terminals

Input AV signal, check if the picture and sound are normal.

5.3 YPbPr/YcbCr terminal

Input YUV signal (VG848 signal generator), separately input the YUV signals listed in table5 and check if the display and sound are normal at any situation (power on, channel switch and format convert, etc.)

Table5 YUV signal format

No.	Resolution	H-frequecny (kHz)	V-frequecny (kHz)	Point clock pulse frequecny (MHz)	Note
1	720X480	15.734	60	13.5	480i(NTSC)
2	720X480	15.734	59.94	13.5	480i(NTSC)
3	720X576	15.625	50	13.5	576i(PAL)
4	720X480	31.469	60	27	480p(NTSC PROG)
5	720X480	31.469	59.94	27	480p(NTSC PROG)
6	720X576	31.25	50	27	576p(PAL PROG)
7	1280X720	45	59.94	74.18	720p(59p)
8	1280X720	45	60	74.25	720p(60p)
9	1280X720	37.5	50	74.25	720p(50p)
10	1920X1080	33.75	59.94	74.25	1080i(59i)
11	1920X1080	33.75	60	74.25	1080i(60i)
12	1920X1080	28.125	50	74.25	1080i(50i)
13	1920X1080	67.5	59.94	148.35	1080p(59p)
14	1920X1080	67.5	60	148.5	1080p(60p)
15	1920X1080	56.25	50	148.5	1080p(50p)
16	1920X1080	-	23.94/24	-	-
17	1920X1080	-	25	-	-
18	1920X1080	-	29.97/30	-	-

5.4 VGA terminal

Input VGA signal (VG848 signal generator), separately input the signals listed in table6 and check the display and sound. If the image is deflection of the Horizontal and vertical, select Picture->Screen->Auto Adjusting to perform auto-correct.

Table6 VGA signal format

No.	Resolution	H-frequecny (kHz)	V-frequecny (kHz)	Point clock pulse frequecny (MHz)	Note
1	640X480	31.469	59.94	25.175	IBM
2	720X400	31.469	70.086	28.322	IBM
3	640X480	37.861	72.809	31.5	VESA
4	640X480	37.5	75	31.5	VESA
5	800X600	35.156	56.25	36	VESA
6	800X600	37.879	60.317	40	VESA
7	800X600	48.077	72.188	50	VESA
8	800X600	46.875	75	49.5	VESA
9	1024X768	48.363	60.004	65	VESA
10	1024X768	56.476	70.069	75	VESA
11	1024X768	60.023	75.029	78.75	VESA
12	1152X864	67.5	75	108	VESA
13	1280X960	60	60	108	VESA
14	1280X1024	63.98	60.02	108	VESA
15	1280X1024	80	75	135	SXGA

16	1440X900	-	60	-	-
17	1680X1050	-	60	-	-
18	1360X768	47.7	60	85.5	-

5.5 HDMI terminal

Input HDMI signal (VG849 signal generator), separately input the signals listed in table5 and table6 and check the display and sound (32KHz, 44.1KHz, 48KHz) at any situation (power on, channel switch and format convert, etc.)

5.6 other functions check

a) Check the turn on/turn off timer, sleep timer, picture/sound mode, OSD, stereo and digital sound port, etc.
b) Check the digital program, if Audio Only is normal.
c) Check MHEG function of the digital program for UK unit.
d) Check if “CI: Common Interface” is normal.
e) Check logical channel number (LCN) for Australia.
f) Check logical channel number (LCN) for France, UK and Italy.
g) Check OTA function for Australia special custom.

6. Presetting before ex-factory

6.1 Enter factory menu and select SSC ADJUST, set SSC MIU and SSC LVDS to ON.

6.2 Enter factory menu and select CUSTOM CHANNEL PRESET, press OK and about 10s the operation will complete, press “list” and there are 5 channels in the list menu.

6.3 Enter user menu LOCK page, select “Restore Factory Default” to preset the ex-factory.

a) Clear the program information.
b) Clear VCHIP, parental control, etc.
c) Set the default data of user menu.
d) Set Menu Language to English.
e) Set Power on Mode to Off.

7. Software instruction

Table7 software instruction

No.	Code No.	Type	Function	written before paste	Method
N810	5272532003	EN25B32-100HIP	FLASH	Yes	Written with device like ALL11, write-protect, refer to note1.
N807	5272404002	AT24C04	HDMI KEY	Yes	Written with device like ALL11
NA03	5272402002	AT24C02	HDMI EDID	Yes	
NA04	5272402002	AT24C02	HDMI EDID	Yes	
NA08	5272402002	AT24C02	HDMI EDID (Australia only)	Yes	
N107	5272421002	AT24LC21A	VGA EDID	Yes	

Note1: write-protect setting: enter ALL-100 interface, select Config and press “config setting”, set Protect to “All Protect”, select “config” when writing. The “write-protect” will be set again when ALL-100 program restart.

Method of software upgrading

1: Software writing and upgrade method with ISP writing-device.

(1) Main board upgrade: connect a four-pin wire of the ISP writing-device to Debug port(X806) on the main board; Unit upgrade: connect VGA ports of the ISP writing-device and the main board, enter factory menu and set “ISP Mode” to “ON”.

(2) Using Mstar writing-tool on line, click “Connect” menu, if it displays “Device EN25B32“ as shown in fig2, the connection is success, if it fails, select “EN25B52” of “Device” manually and press “Connect” again.

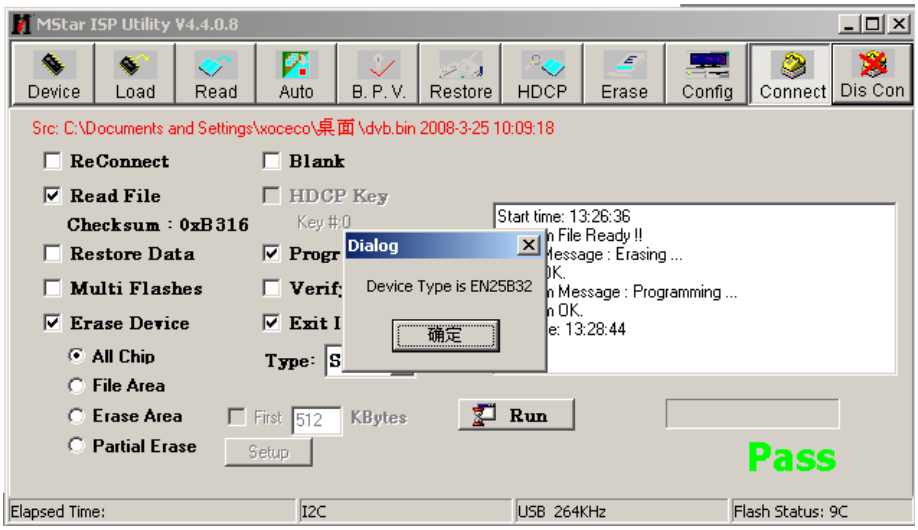

Fig2 Device EN25B52 successful connection

(3) Click “Read” and select the file written (MERGE.bin for example) as shown in fig3.

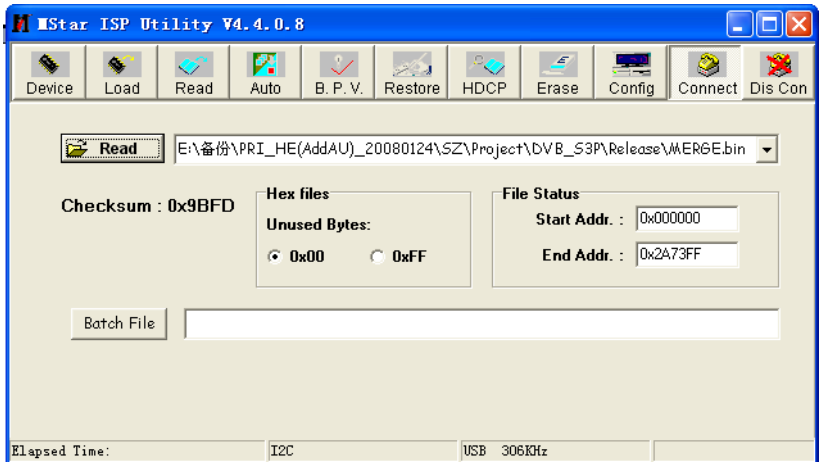

Fig3 the written file

(4) Click “Auto”, select “All chip”, “program” and other items as shown if fig4.

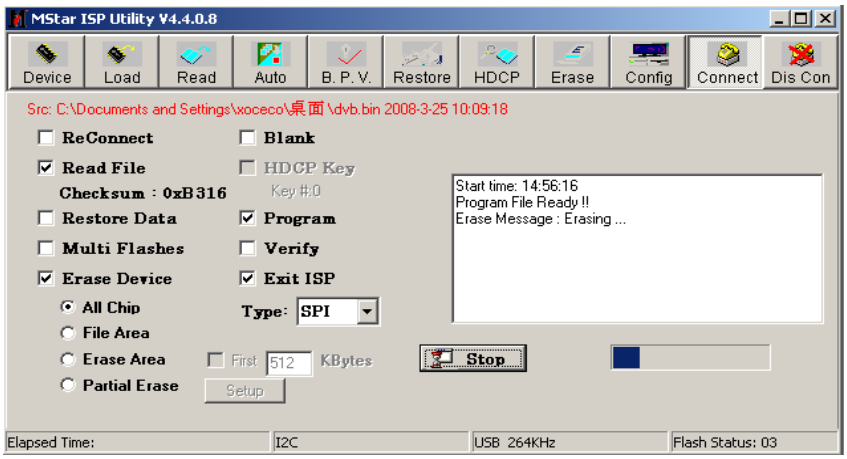

Fig4 selected items

(5) Press “Run” in fig4 to begin writing and there are two steps: Erase and Program.

(6) If the process of writing succeeds, it will display “Pass” near “Run” as shown in fig5.

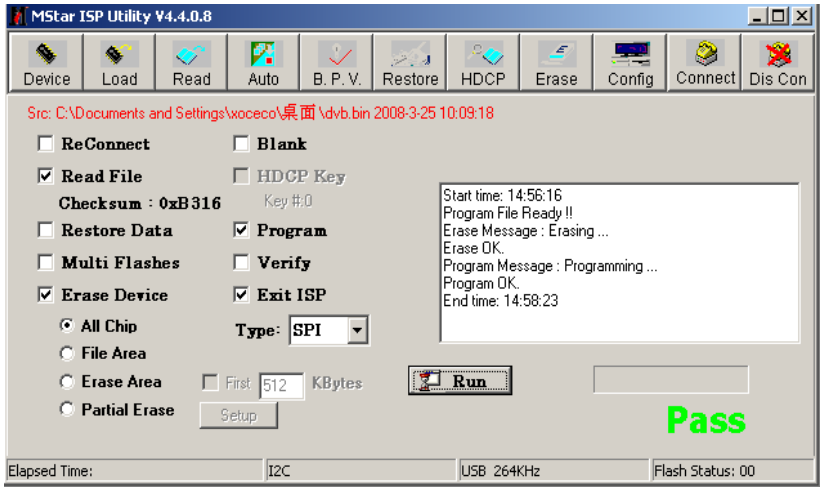

Fig5

(7) Repeat step 2) and 5) to write the program to the other units without exit the ISP interface.

2: Software writing and upgrade method with USB port

(1) Make sure the USB device is formatted as FAT32.

(2) Copy the program named Merge.bin to USB device.

(3) Insert the USB device to USB port of the unit, power on and select RF-ATV channel, begin USB upgrade after OSD disappear. It will display blue when read the data from USB device, while display red when write Flash. The flash must be pull out when display red. It will flicker in red and blue if the process of writing is abnormal.

(4) The method are not applicable to all the USB devices, try another one if a certain USB device is inapplicable.

Working principle analysis of the unit

1. PAL/SECAM signal flow:

Antenna reception PAL/SECAM signal will be send to tuner TDA1616, which contains frequency turning, HF and IF amplifier circuit and is controlled by master control IC MSD109 (comprises CPU) through I2C bus. The analog IF signal via intermediate frequency amplifying, video SAW filter K3953 and audio SAW filter K9656 to input to analog demodulate IC (IF) R2A10406NP, after demodulating and output standard video signal TV-CVBS and sound IF signal (SIF).

TV-CVBS will send to the master control IC MSD109 to video decode, deinterlace and scale, then output LVDS level drive for panel display.

The sound IF (SIF) will be fed into MSD109, after demodulating, pre-amplifying, bass adjusting and volume control, the sound signal will separate into L/R channels and input to earphone amplifier BH3547F amplifying, then output two ways. One way will be sent to earphone, another will be sent to digital sound amplifier R2A15112FP amplifying then sent to speaker.

2. DVB-T signal flow:

Antenna reception DVB-T signal will be sent to tuner TDA1616, after frequency tuning, HF amplification, IF amplification and SAW FILTER, output IF signal to demodulation chip CE6353, via QAM demodulation, fed to MSD109 for information source decoding in the format of standard serial TS stream.

HD video signal via decoding to A/D conversion and OSD superposition, at last output LVDS drive level for panel display.

HD audio signal via decoder built-in MSD109, resumed to multi- channel sound of Dolby AC-3. The audio signal will be sent to back end to perform bass adjustment and volume control, then it will separate into L/R channels and input to earphone amplifier BH3547F amplifying, then output two ways. One way will be sent to earphone, another way will be sent to digital sound amplifier R2A15112FP amplifying then sent to speaker.

3. AV/SV signal flow

SV signal and the first path AV signal switch automatically via S-terminal socket, the signal and the second path AV signal will be fed to MSD109 to perform video decode, deinterlace and scale, then output LVDS drive level for panel display.

Audio signal from AV/SV via matched resistance is fed to external audio switch HEF4052 to switch, then it is directly sent to MSD109 to bass adjust and volume control, the sound will separate into L/R channels and input to earphone amplifier BH3547F amplifying, then output two ways. One way will be sent to earphone, another way will be sent to digital sound amplifier R2A15112FP amplifying then sent to speaker.

4. PC/YPrPb signal flow

PC and the second path YPbPr signal are switched via external switcher PI5V330, then the signal and the first path YPbPr signal will be sent to MSD109 A/D conversion, output R/G/B of 24 bit to back end module to digital decode, image scale and OSD superposition, then send to LVDS level drive for panel display.

Sound signal of PC/YPrPb via matched resistance and a-c couple are sent to MSD109 to bass adjust and volume control, the sound will separate into L/R channels and input to earphone

amplifier BH3547F amplifying, then output two ways. One way will be sent to earphone, another way will be sent to digital sound amplifier R2A15112FP amplifying then sent to speaker.

5. HDMI signal flow

Three HDMI video signals via switcher PS321 are directly fed to the master control IC MSD109 to digital decode, image scale and OSD superposition, then output LVDS drive level for panel display. HDMI audio signal via decoder built-in MSD109 is fed to back end to bass adjust and volume control, the sound will separate into L/R channels and input to earphone amplifier BH3547F amplifying, then output two ways. One way will be sent to earphone, another way will be sent to digital sound amplifier R2A15112FP amplifying then sent to speaker.

Block diagram

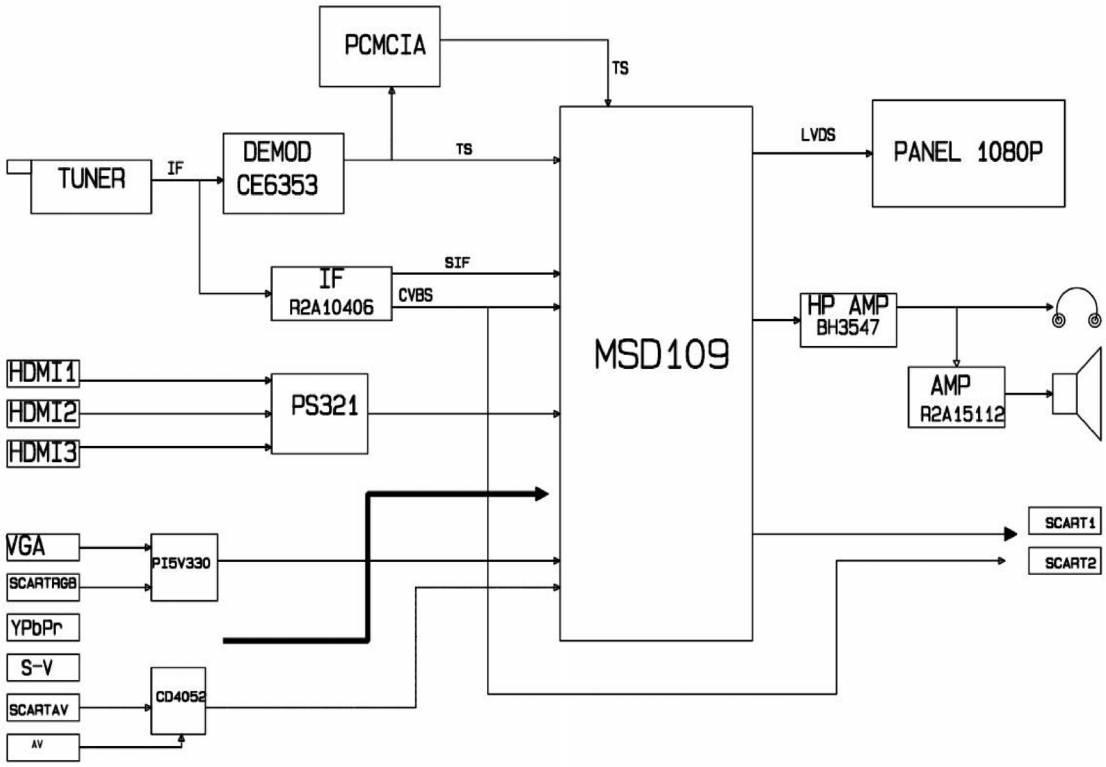

IC block diagram

1. MSD109CL

Twin-turbo 8051 MCU

Supports multi-path TS stream input

Two paths TS stream output, integrated switch selection

Supports both serial and parallel TS stream input

Maximum TS data rate is 104Mbps for serial or 13MB/sec for parallel

MPEG-2 audio decoder

MPEG-1, MPEG-2 (Layer I/II) and Dolby1 Digital(AC-3) audio decoder

MPEG-4 decoder

NTSC/PAL/SECAM video decoder

Supports NTSC-M, NTSC-J, NTSC-4.43, PAL (B,D,G,H,M,N,I,), and SECAM

Multi-standard sound processor

Supports BTSC/A2/EIA-J demodulation in NTSC and A2/NICAM/FM/AM demodulation in PAL

Supports MTS Mode MONO/STEREO/SAP in BTSC/EIA-J and MONO/STEREO/DUAL in A2/NICAM

Digital Audio Interface

Analog RGB Compliant/YUV input Ports

Two analog ports support up to 1080P

Supports PC RGB input up to SXGA@75Hz

Supports HDTV RGB/YPbPr/YCbCr

Supports Composite Sync and SOG (Sync-on-Green) separator

Automatic color calibration

DVI/HDCP/HDMI input ports

Supports up to 225MHz @ 1080P 60Hz with 12-bit deep-color resolution

High-bandwidth Digital Content Protection (HDCP) 1.1 compliant receiver

High Definition Multimedia Interface (HDMI) 1.3 compliant receiver with CEC (Consumer Electronics Control) support

Video Processing & Conversion

3-D motion adaptive video de-interlacers with edge-oriented adaptive algorithm for smooth low-angle edges

Automatic 3:2 pull-down & 2:2 pull-down detection and recovery

10-bit internal data processing

3-D video noise reduction

Output Interface

Supports up to 10-bit dual LVDS full-HD (1920 x 1080) panel interface

Video output port

Supports CVBS/S-video bypass output

Built-in video encoder for encoding digital video into CVBS output

Miscellaneous

Supports DVB-CI port conditional receiver

USB 2.0 port can be connected to the external equipment for software upgrading

2. CE6353

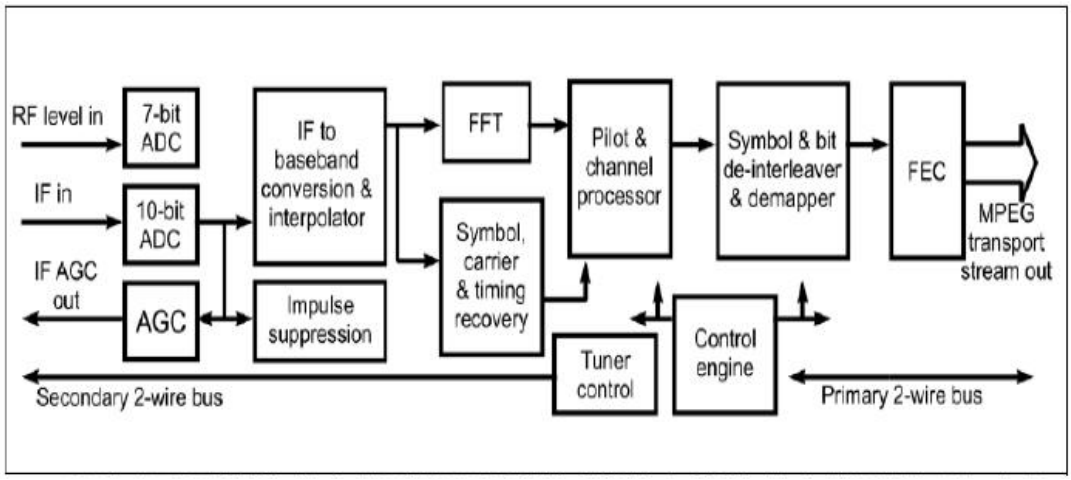

The chip comprises 8MHz bandwidth SAW and supports demodulation of 6MHz, 7MHz and 8MHz, 2K/8K carrier and supports both serial and parallel TS stream output.

3. R2A10406NP

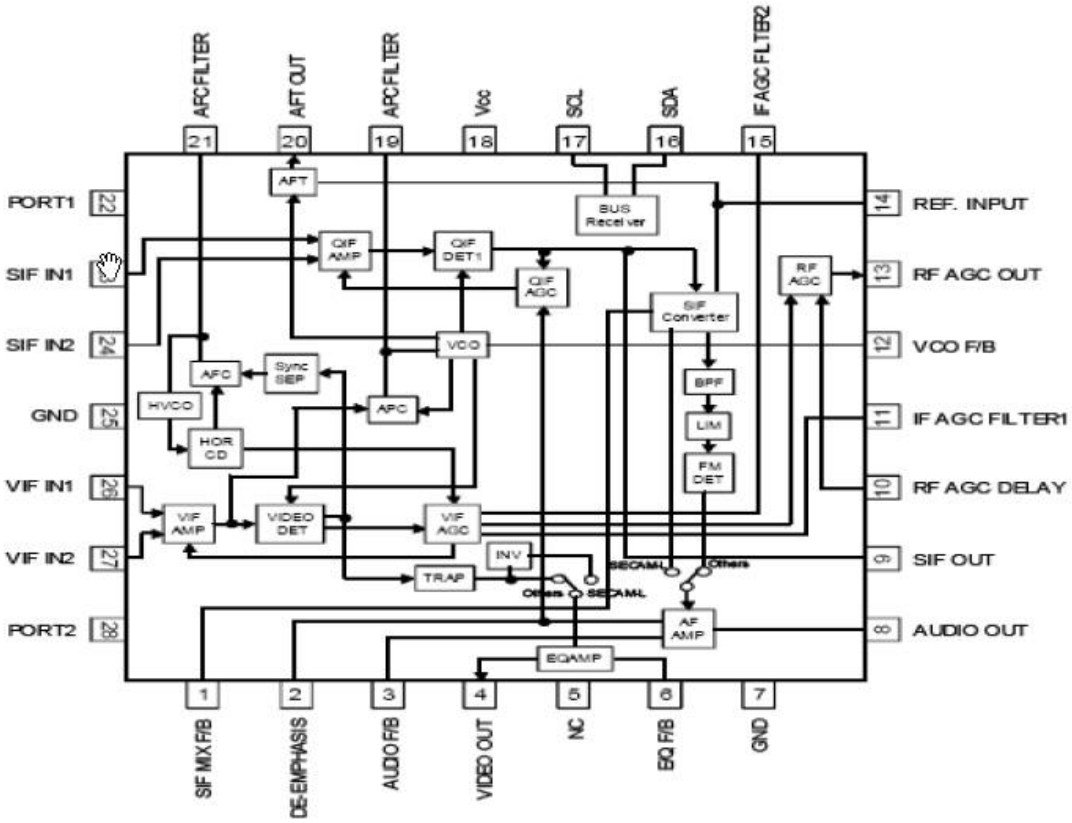

*VIF frequency corresponds to 38.9MHz.
*SIF frequency corresponds to M/N,B/G,I,D/K and SECAM L,L'.
*I2CBUS control.

4. PS321

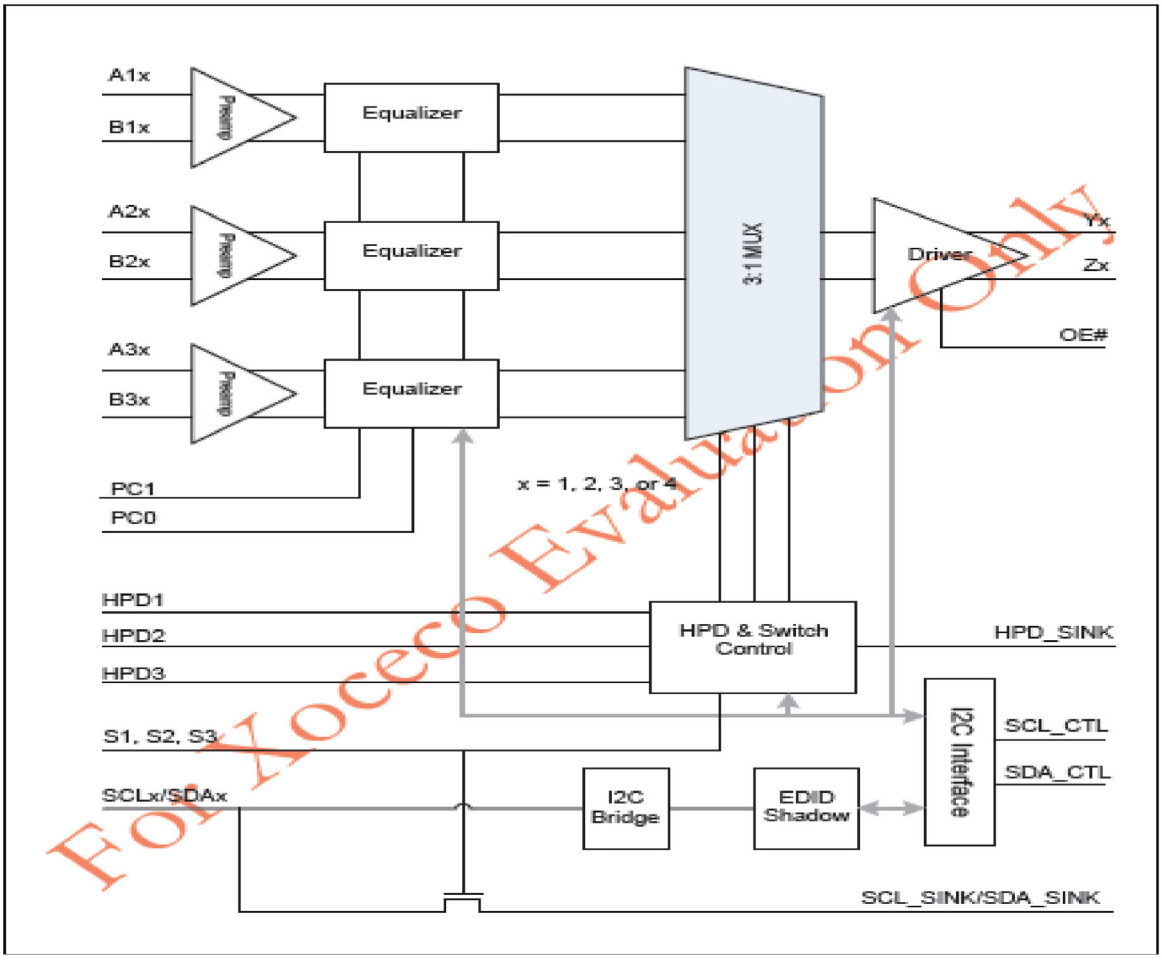

For Xoceco Evaluation Only

The chip supports both I2C control and I/O control mode; supports both internal and external EDIT.

5. R2A15112FP

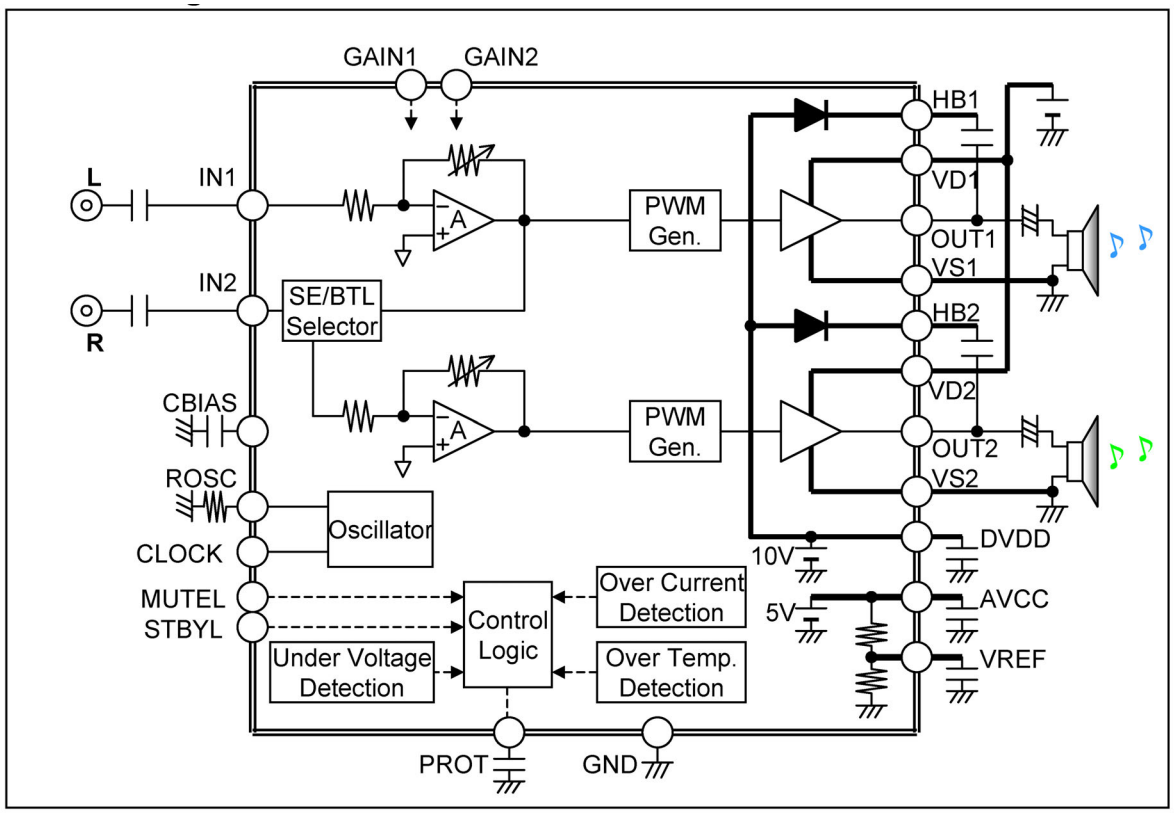

R2A15112FP has a maximum power of 15W(typ) × 2ch.
(VD = 24V,THD = 1%, SE) at a 4 Ω load.

Item	Symbol	Terminal		GAIN Value
		GAIN1	GAIN2	
GAIN	G1	L	L	15.5 dB
	G2	H	L	21.5 dB
	G3	L	H	27.5 dB
	G4	H	H	31.5 dB

6. TDA1616

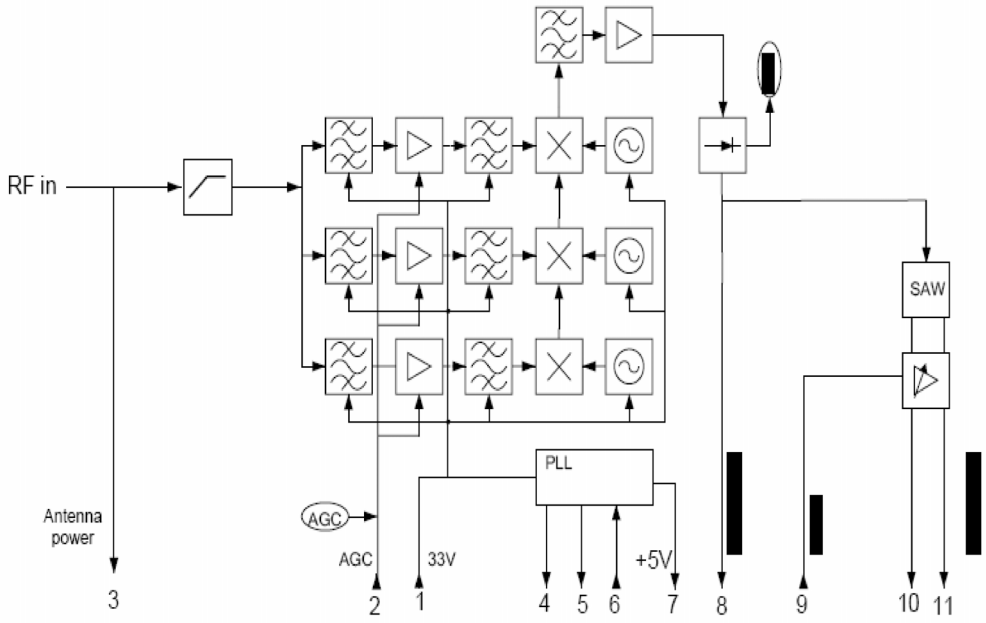
RF in
Antenna
power
3
AGC
AGC
2
33V
1
PLL
4
5
6
+5V
7
8
9
SAW
10
11

Wiring diagram

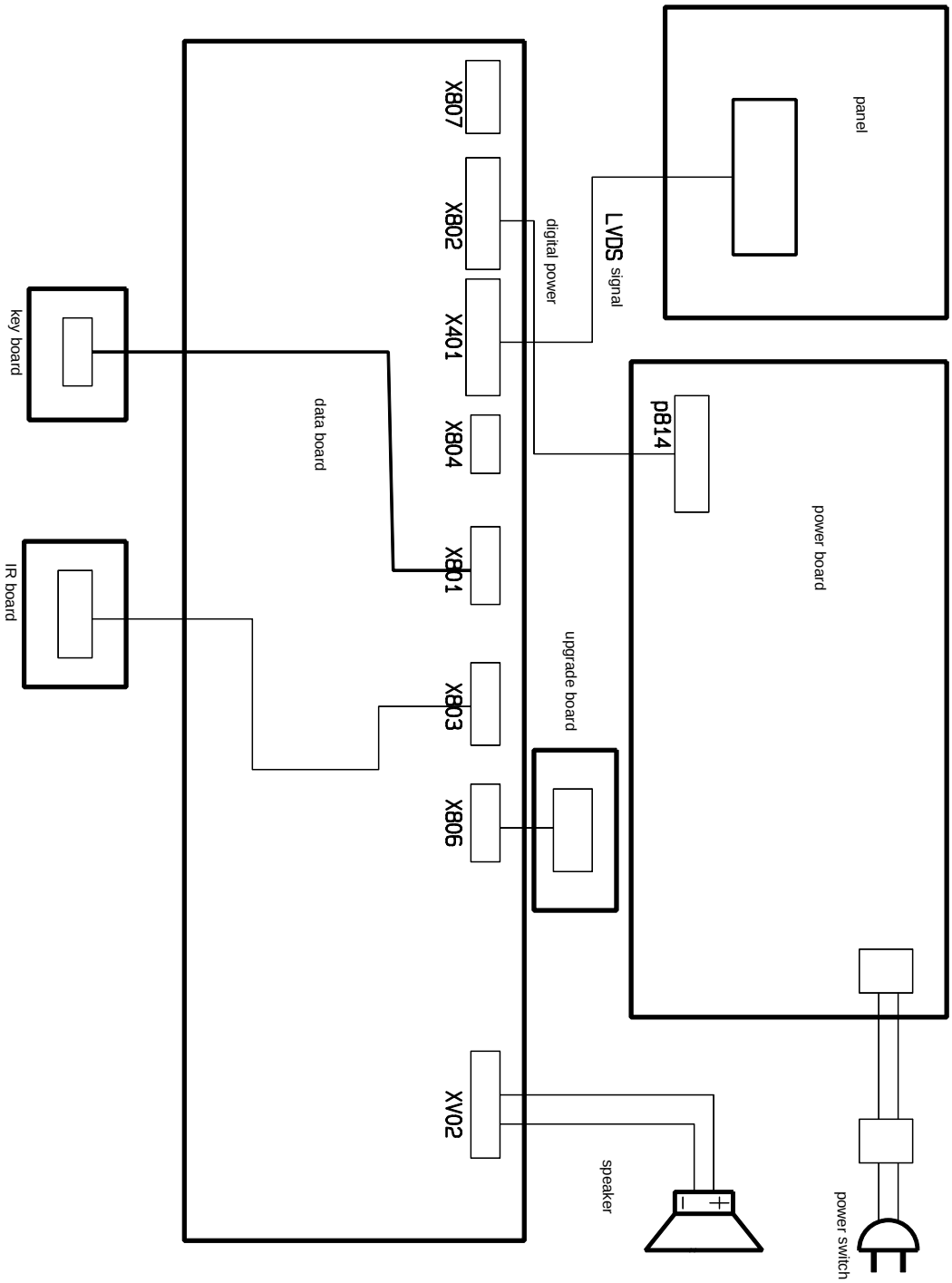

Trouble shooting

1. Fault clearance

Before servicing please check to find the possible causes of the troubles according to the table below.

1.1 Antenna (signal):

Picture is out of focus or jumping	● Bad status in signal receiving ● Poor signal ● Check if there are failures with the electrical connector or the antenna. ● Check if the antenna is properly connected.
Fringe in picture	● Check if the antenna is correctly oriented. ● Maybe there is electric wave reflected from hilltop or building.
Picture is interfered by stripe shaped bright spots	● Possibly due to interference from automobile, train, high voltage transmission line, neon lamp etc. ● Maybe there is interference between antenna and power supply line. Please try to separate them in a longer distance. ● Maybe the shielded-layer of signal wire is not connected properly to the connector.
There appear streaks or light color on the screen	● Check if interfered by other equipment and if interfered possibly by the equipment like transmitting antenna, non-professional radio station and cellular phone.

1.2 TV set:

Symptoms	Possible cause
Unable to switch the power on	● Check to see if the power plug has been inserted properly into the socket.
No picture and sound	● Check to see if the power supply of liquid crystal TV has been switched on. (As can be indicated by the red LED at the front of the TV set) ● See if it's receiving the signal that is transmitted from other source than the station ● Check if it's connected to the wrong terminal or if the input mode is correct. ● Check if the signal cable connection between video frequency source and the liquid crystal TV set is correct.
Deterioration of color phase or color tone	● Check if all the picture setups have been corrected.
Screen position or size is not proper	● Check is the screen position and size is correctly set up.
Picture is twisted and deformed	● Check to see if the picture-frame ratio is properly set up.
Picture color changed or colorless	● Check the "Component" or "RGB" settings of the liquid

	crystal TV set and make proper adjustment according to the signal types.
Picture too bright and there is distortion in the brightest area	● Check if the contrast setting is too high. ● Possibly the output quality of DVD broadcaster is set too high. ● It maybe also due to improper terminal connection of the video frequency signal in a certain position of the system.
Picture is whitish or too bright in the darkest area of the picture	● Check if the setting for the brightness is too high ● Possibly the brightness grade of DVD player (broadcaster) is set too high.
No picture or signal produced from the displayer if “XXX in search” appears.	● Check if the cable is disconnected. ● Check if it’s connected to the proper terminal or if the input mode is correct.
There appears an indication - “outside the receivable scope)	● Check if the TV set can receive input signal. The signal is not correctly identified and VGA format is beyond the specified scope.
Remote control cannot work properly	● Check if the batteries are installed in the reverse order. ● Check if the battery is effective. ● Check the distance or angle from the monitor. ● Check if there is any obstruct between the remote control and the TV set. ● Check if the remote control signal- receiving window is exposed to strong fluorescence.
No picture and sound, but only hash.	● Check if the antenna cable is correctly connected, or if it has received the video signal correctly.
Blur picture	● Check if the antenna cable is correctly connected. ● Of if it has received the right video signal.
No sound	● Check if the “mute” audio frequency setting is selected. ● Check if the sound volume is set to minimum. ● Make sure the earphone is not connected. ● Check if the cable connection is loose.
When playing VHS picture search tape, there are lines at the top or bottom of the picture.	● When being played or in pause VHS picture search tape sometimes can’t provide stable picture, which may lead to incorrect display of the liquid crystal TV, In this case please press “auto” key on the remote control so as to enable the liquid crystal TV set to recheck the signal and then to display correct picture signal

2. Troubleshooting guide

2.1. No raster

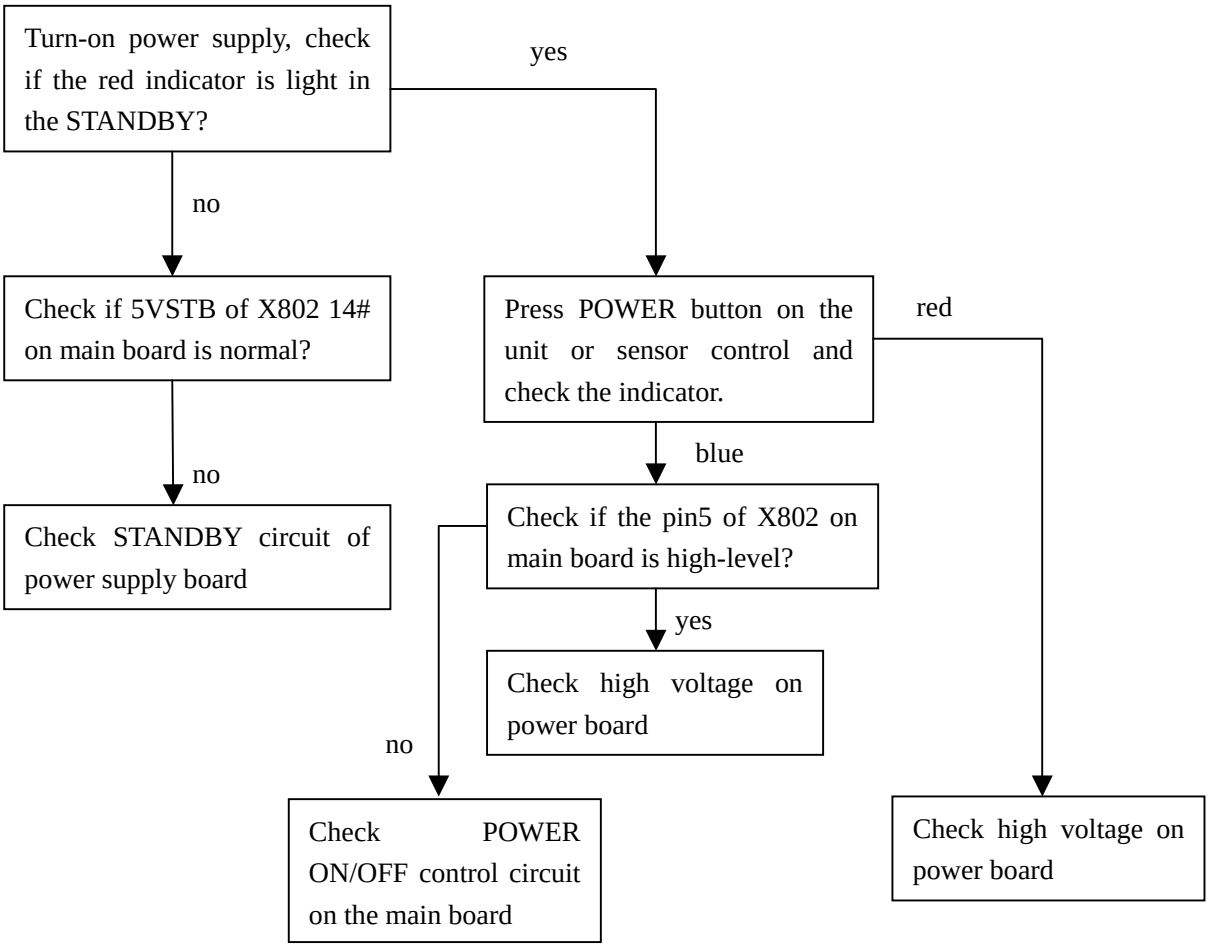

2.2. Backlight, but no picture

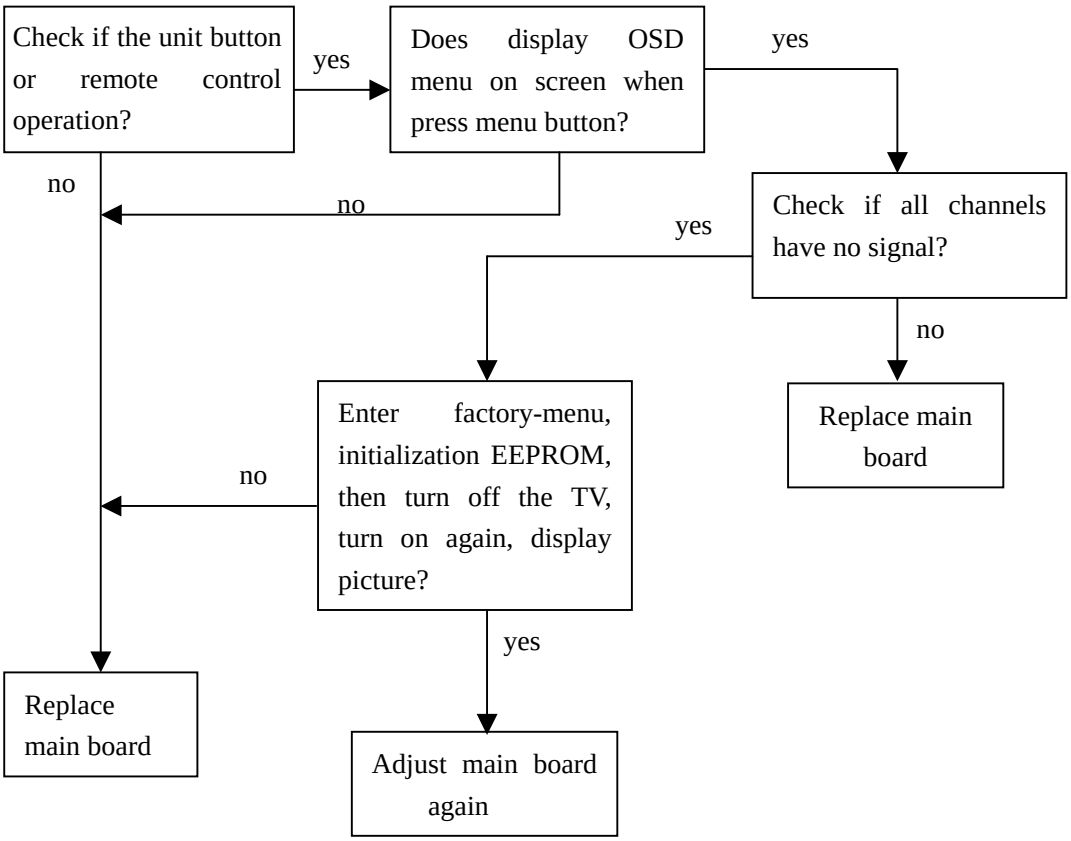

2.3 Picture, but no sound

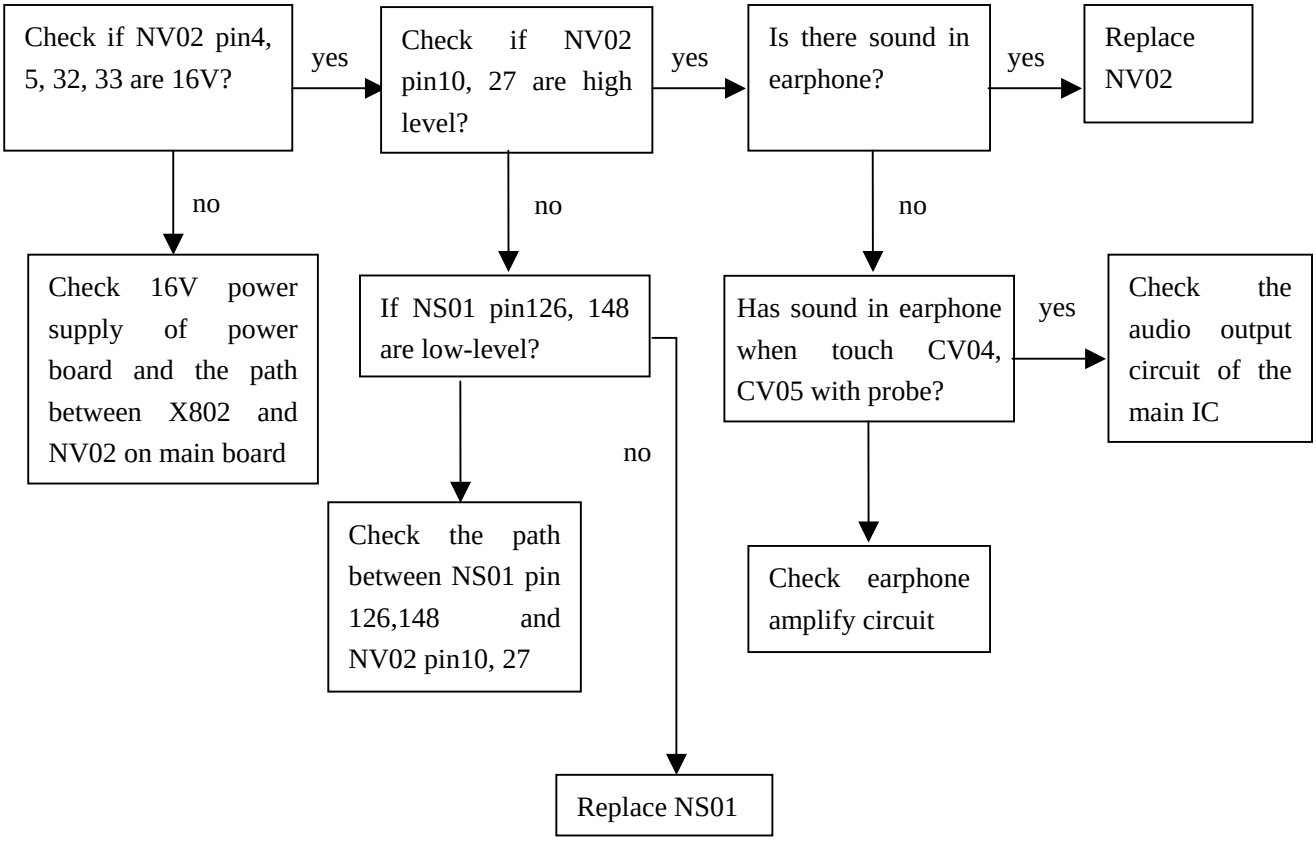

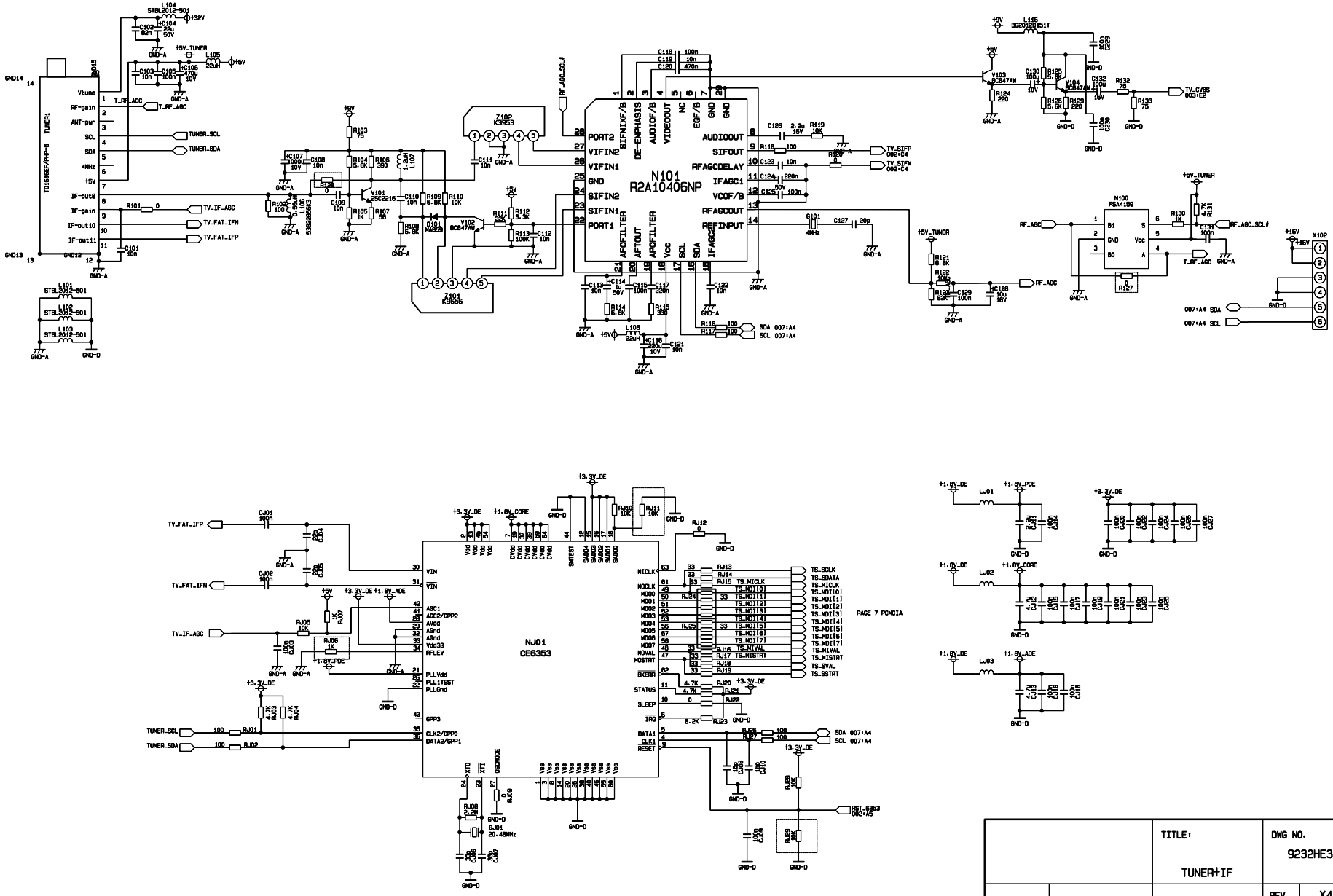

		TITLE: TUNER+IF	DWG NO. 9232HE3601DL
DRAWN BY			REV. X4.1
			Sheet 1 to 8
APPROVED BY			XOCECO XIAMEN OVERSEAS CHINESE ELECTRONIC CO., LTD.

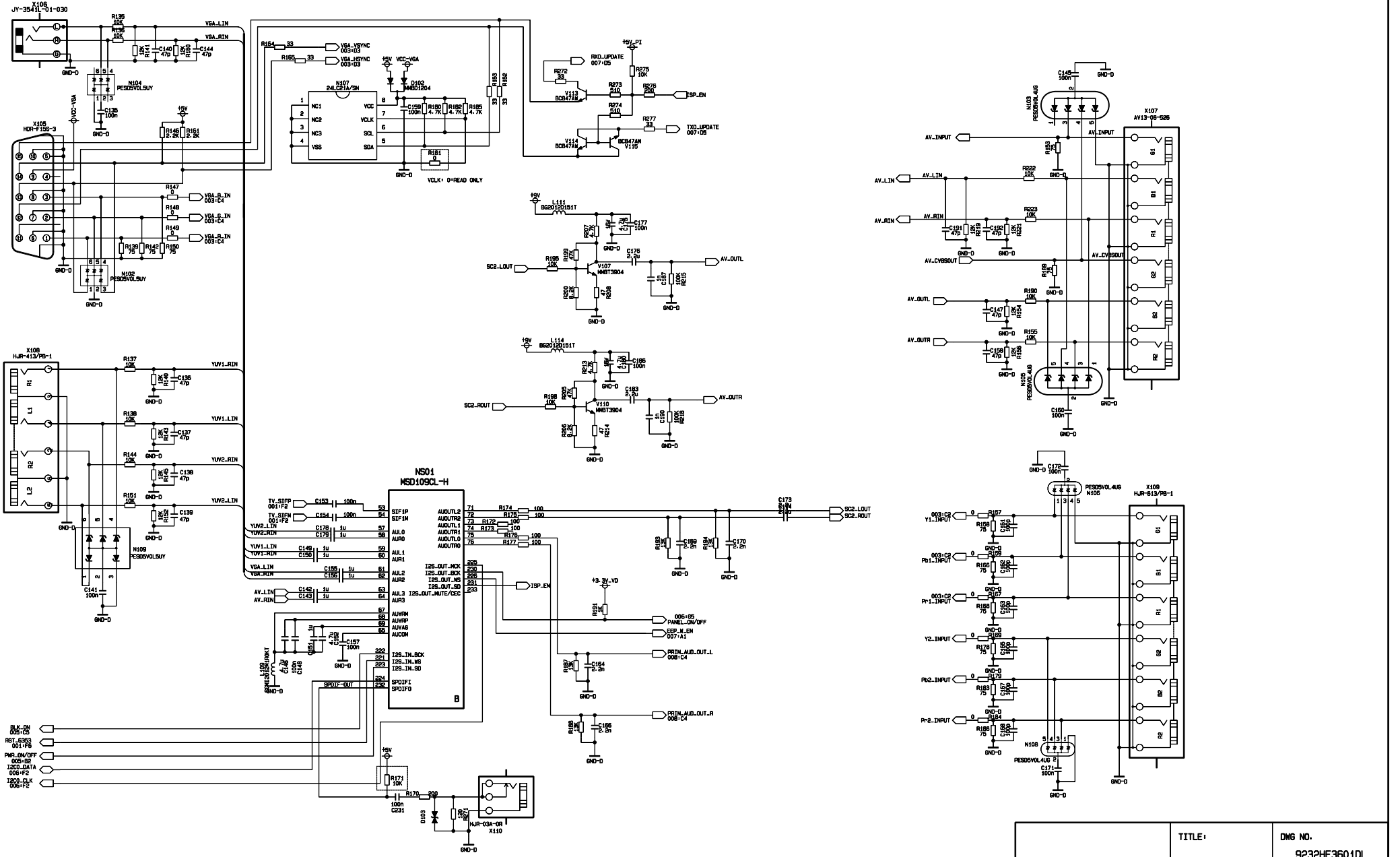

		TITLE: AUDIO IN/OUT	DWG NO. 9232HE3601DL
DRAWN BY			REV. X4.1
APPROVED BY			Sheet 2 to 8
			XOCECO XIAMEN OVERSEAS CHINESE ELECTRONIC CO., LTD.

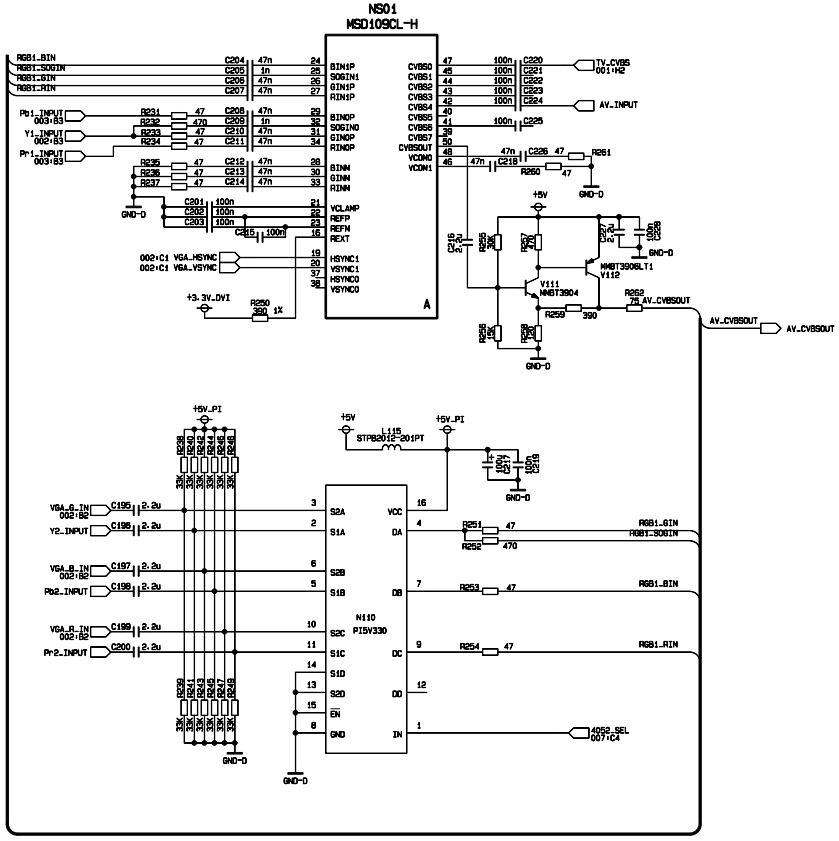

		TITLE: VIDEO IN/OUT	DWG NO. 9232HE3601DL
DRAWN BY			REV. X4.1
APPROVED BY			Sheet 3 to 8
			XOCECO XIAMEN OVERSEAS CHINESE ELECTRONIC CO., LTD.

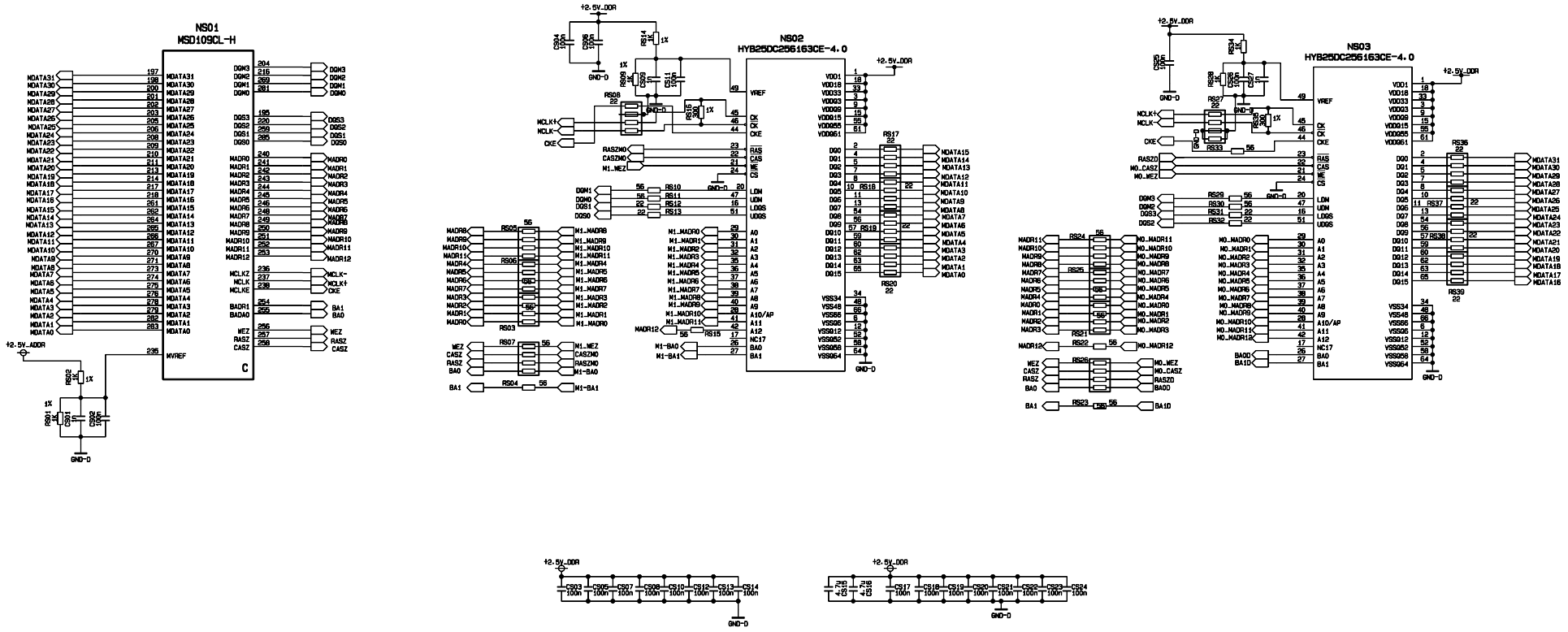

		TITLE: DDR MEMORY	DWG NO. 9232HE3601DL
DRAWN BY			REV. X4.1
APPROVED BY			Sheet 4 to 8
			XOCECO XIAMEN OVERSEAS CHINESE ELECTRONIC CO., LTD.

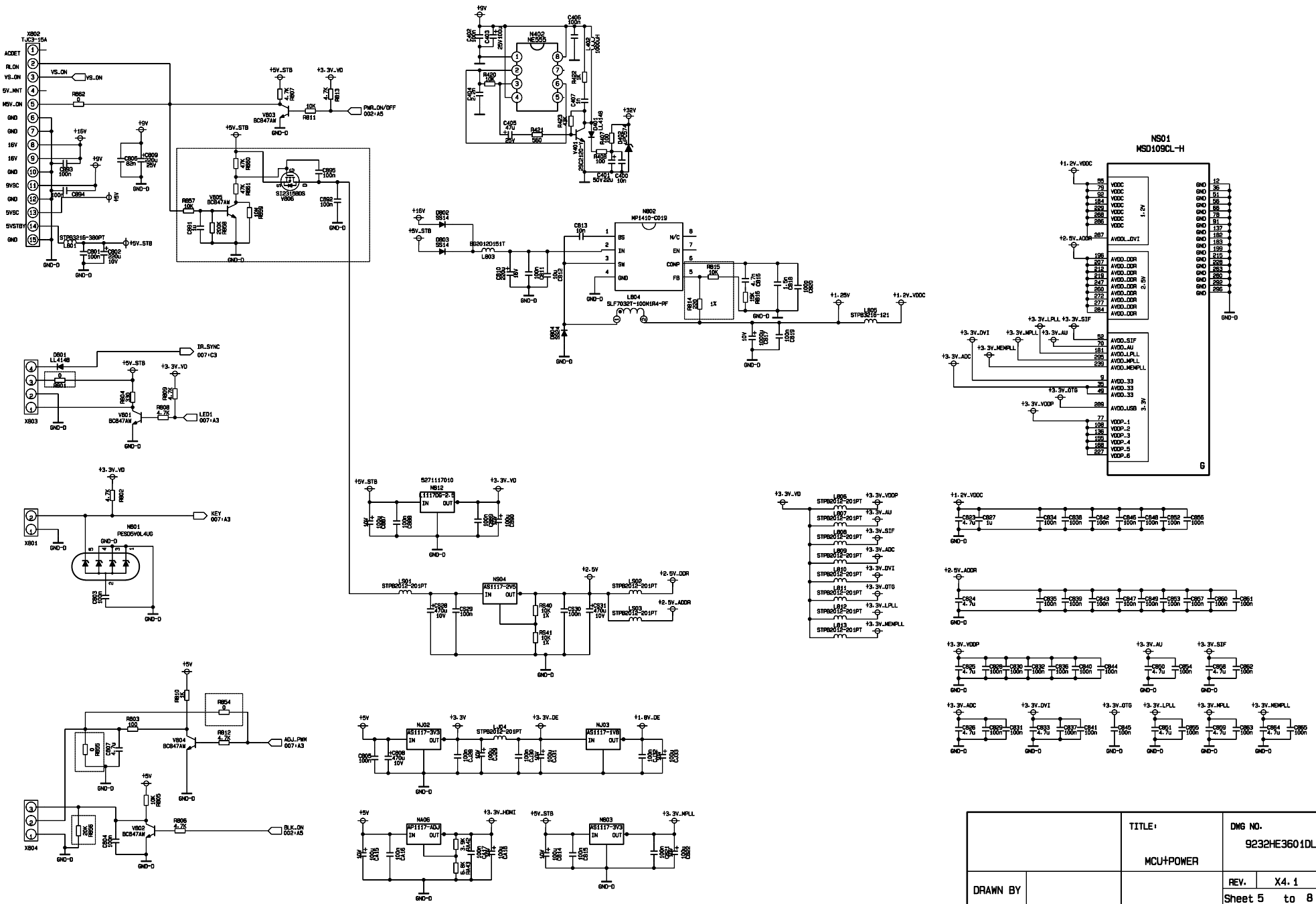

		TITLE: MCU+POWER	DWG NO. 9232HE3601DL
DRAWN BY			REV. X4.1
APPROVED BY			Sheet 5 to 8
			XOCECO XIAMEN OVERSEAS CHINESE ELECTRONIC CO., LTD.

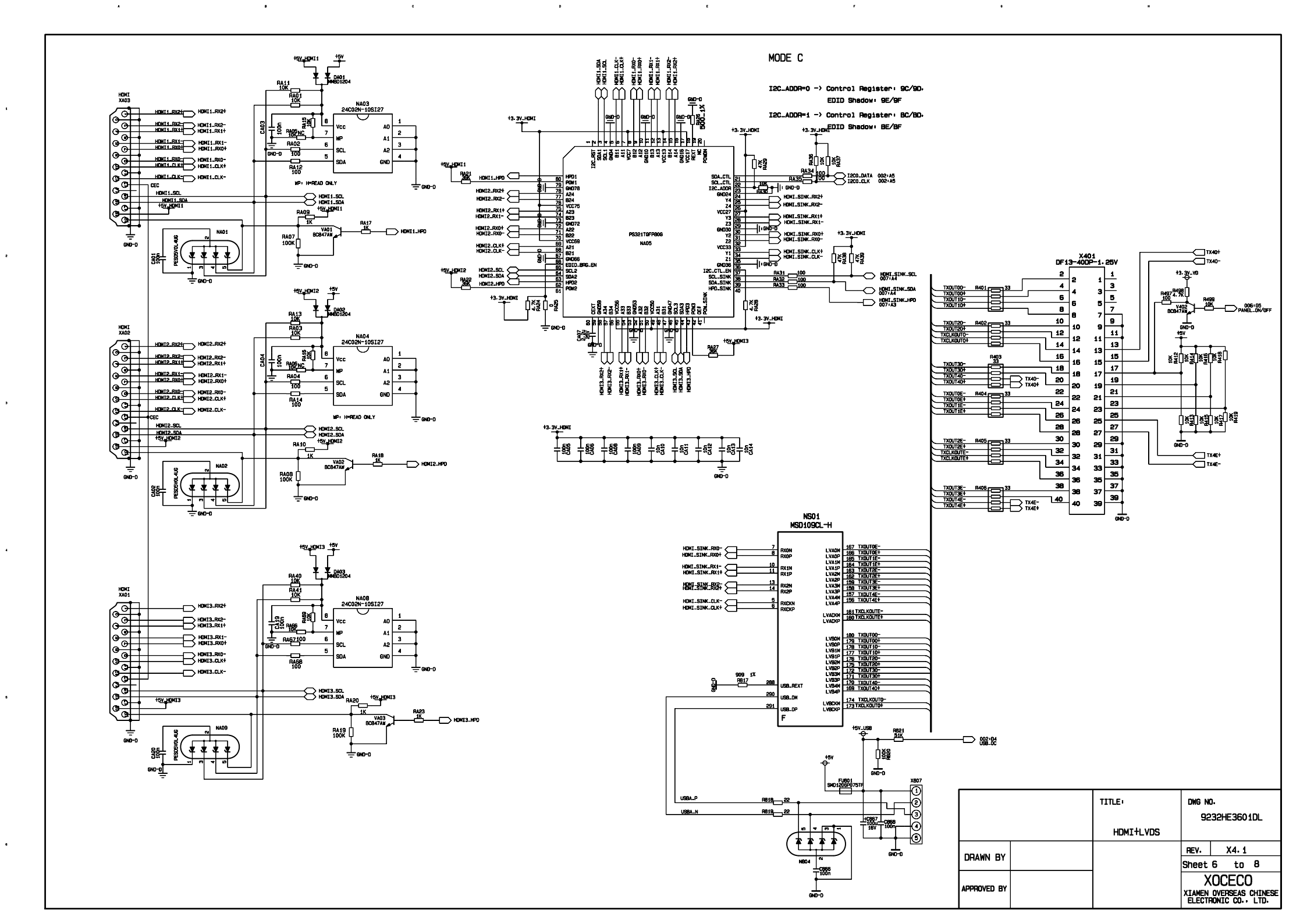
MODE C
I2C_ADDR=0 -> Control Register: 9C/9D,
EDID Shadow: 9E/9F
I2C_ADDR=1 -> Control Register: BC/BD,
EDID Shadow: BE/BF
PS321TQFP80G
NA05
MSD109CL-H
NS01
X401
DF13-40DP-1.25V
TITLE:
HDMI+LVDS
DWG NO.
9232HE3601DL
REV.
X4.1
DRAWN BY
APPROVED BY
Sheet 6 to 8
XOCECO
XIAMEN OVERSEAS CHINESE ELECTRONIC CO., LTD.

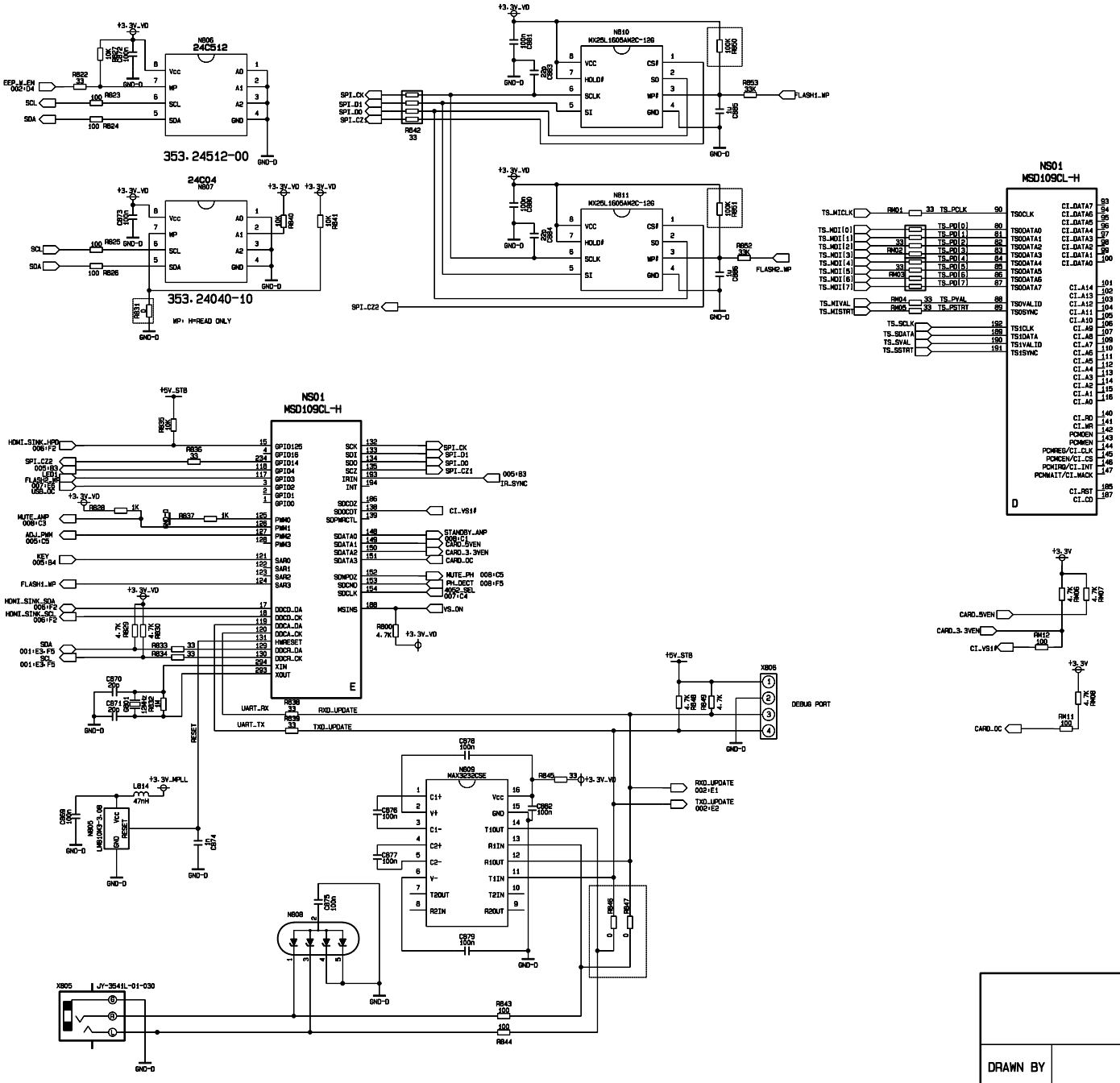

		TITLE: MISC+PCMCIA	DWG NO. 9232HE3601DL
DRAWN BY			REV. X4.1
APPROVED BY			Sheet 7 to 8
			XOCECO XIAMEN OVERSEAS CHINESE ELECTRONIC CO., LTD.

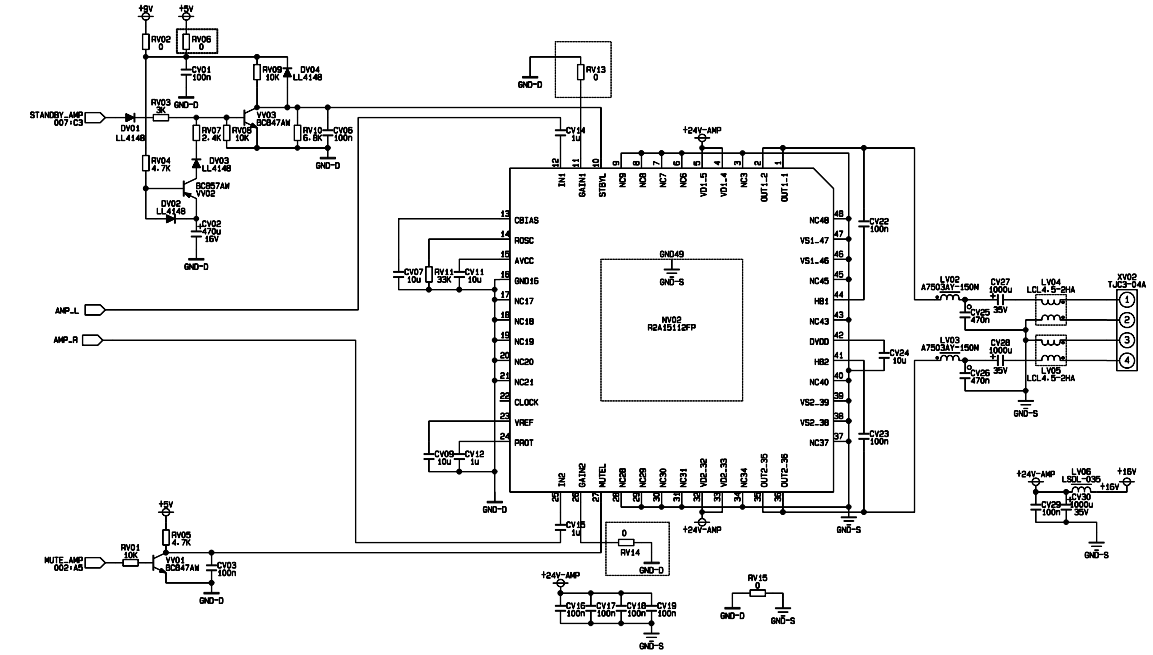

		TITLE: AUDIO AMP	DWG NO. 9232HE3601DL
DRAWN BY			REV. X4.1
APPROVED BY			Sheet 8 to 8
			XOCECO XIAMEN OVERSEAS CHINESE ELECTRONIC CO., LTD.

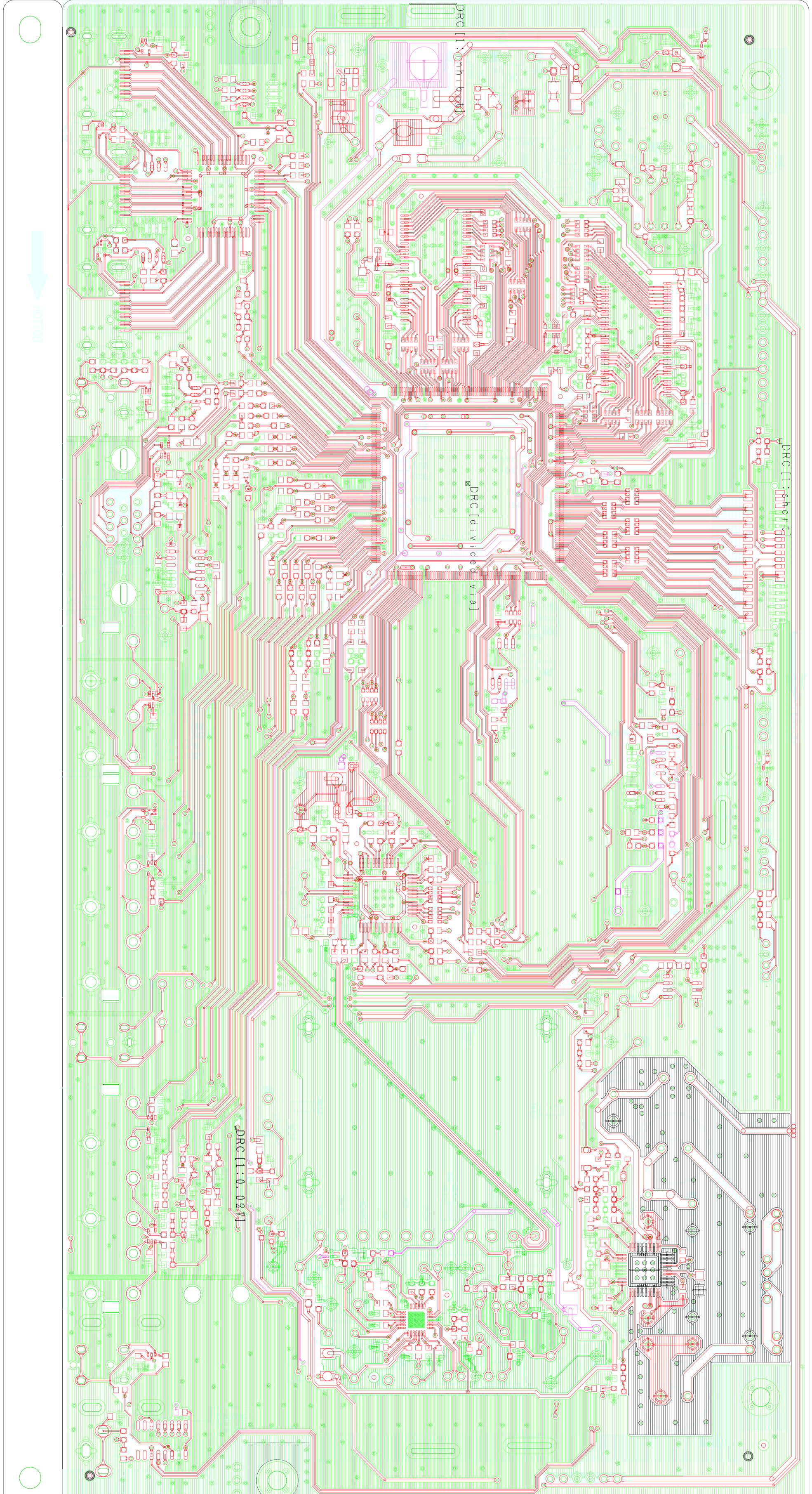
DRC [1 : on bot]
DRC [divided via]
DRC [1 : short]
DRC [1 : 0.0241]

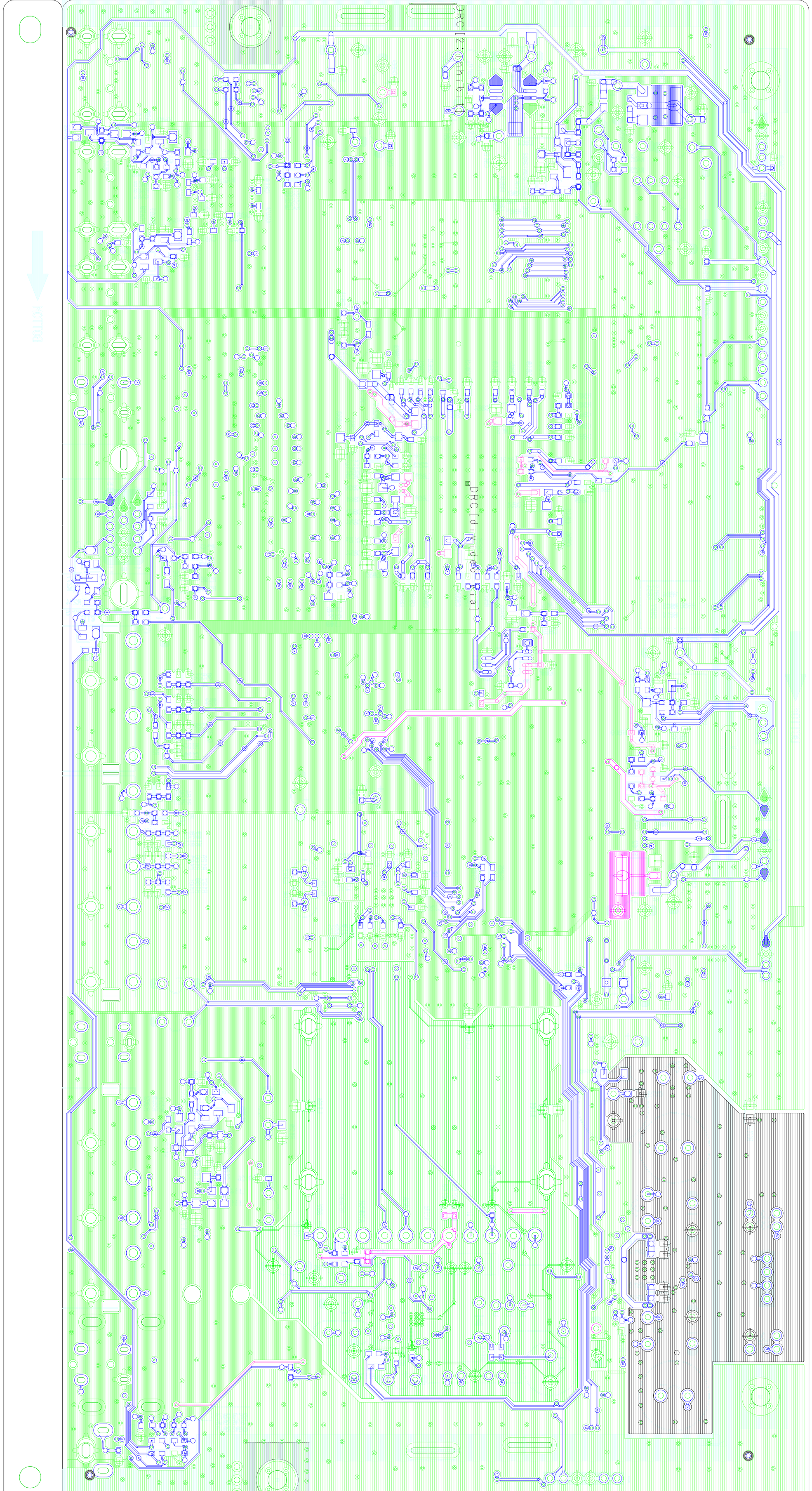
FOLLOW
DRC [2.unbi
DRC [d rxdec ra]

APPENDIX-A: Main assembly PDP-32XS8DA

NAME	NO.	MAIN COMPONENT AND IT'S NO.	
Data processing board	XI6HE0106910	NS01 N101 NJ01 NA5 NV02	MSD109CL (5270109001) R2A10406NP (5271040601) CE6353 (5276353001) PS321TQF (5270321001) R2A15112FP (5271511201)
Key board	XI6HU0660510		
IR board	XI6HE0100910		
Remote control	XI6010J01701	RC-J17-0A	
Panel	XI5205321202	PDP32F1X031	

PDP-32XS8DA

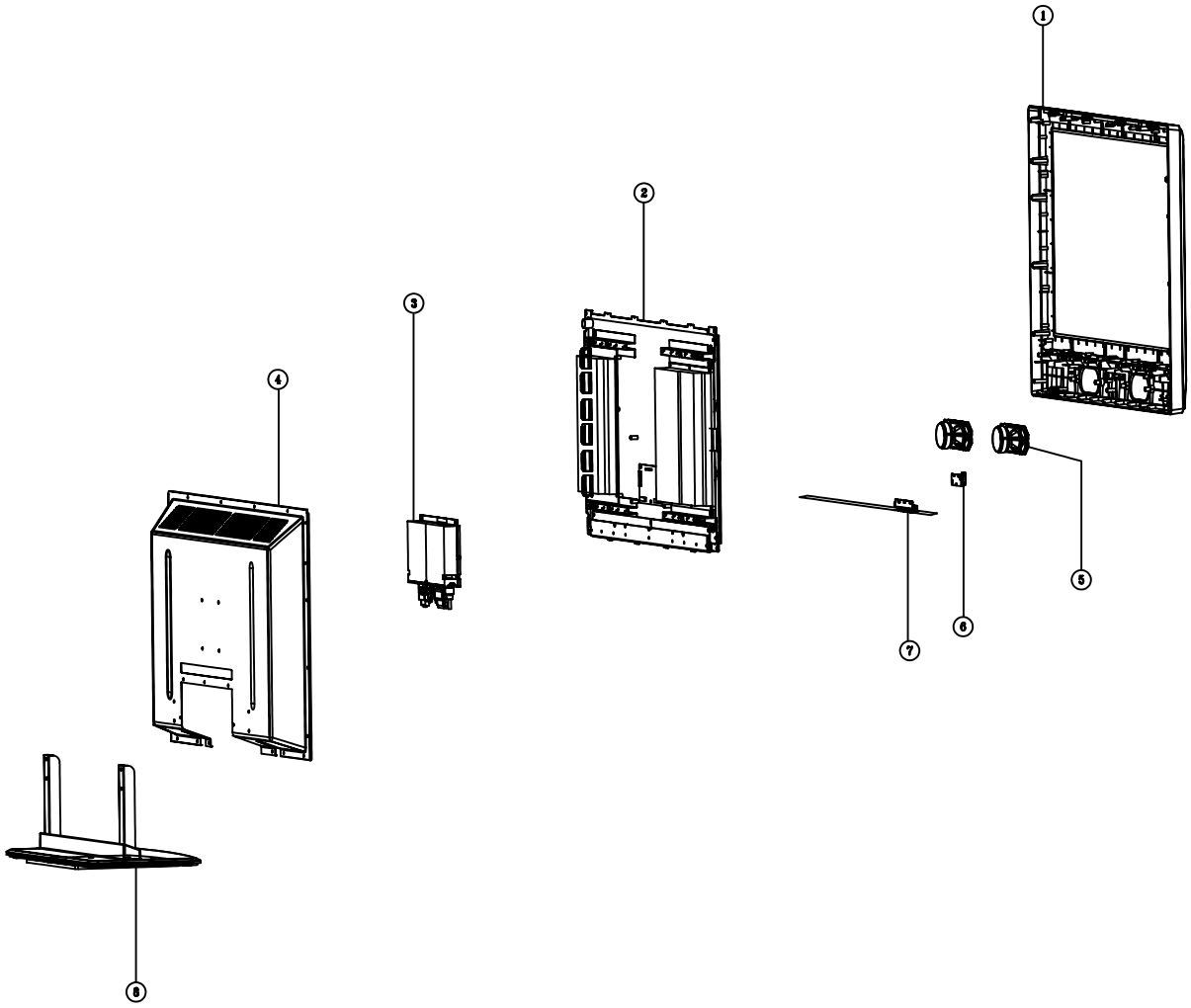

PART LIST OF EXPLODED VIEW

NO.	DESCRIPTION
1	Front cabinet
2	Panel
3	Data processing board
4	Back cabinet
5	Speaker
6	IR board
7	Key board
8	Stand
9	User manual
10	Remote control

PART LIST

PDP-32XS8DA ver.1.0

REF.No.	PARTS No.	DESCRIPION	Q'TY	REMARK
1	XI5Q635L1060	Front cabinet	1	
2	———	Panel	1	PDP32F1X031
3	XI6HE0106910	Data processing board	1	
4	XI5H635LI01A	Back cabinet	1	
5	XI6170770000	Speaker	1	
6	XI6HE0100910	IR board	1	
7	XI6HU0660510	Key board	1	
8	XI6150091120	Stand	1	
9	XI5944032650	User manual	1	
10	XI6010J01701	Remote control	1	

- Only the parts in above list are used for repairing.
- Other parts except the above parts can't be supplied.

The panel board of LG-PDP32F1X031 (XI5205321202) Ver. 2.0

Ref. No.	Parts No.	Description	QTY	Remark
11	XI60Z0000414	LOGIC BOARD	1	
12	XI60Z0000412	Y-SUS	1	
13	XI60Z0000413	Z-SUS	1	
14	XI60Z0000411	POWER BOARD	1	
15	XI60Z0000447	XRLB BOARD	1	
16	XI60Z0000448	XRRB BOARD	1	

- These boards are the parts of the panel.
- The source of these panel boards is according to the panel supplier.

Removing or Installing the Stand

Cautions:

1. Carefully handle the unit during setup and consult authorized service personnel to ensure successful installation.

2. Before performing work spread cushioning over the base area to lay the Display on. This will prevent it from being damaged.

3. Disconnect the AC power cord firstly.

To remove the stand: (if wall mounting)

1.Lay your TV flat (screen down) on a table or bench. Make sure that you put down a soft cushion or cloth so that your TV is not scratched.

2.Loosen the four M4 screws on the Stand to remove the Stand. (Please keep these screws for future use if you want to install the stand again.)

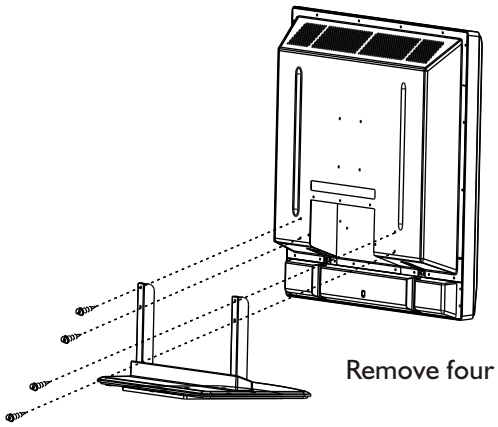

Remove four screws

To install the stand

1.Lay your TV flat (screen down) on a table or bench. Make sure that you put down a soft cushion or cloth so that your TV is not scratched.

2. Align the holes in the stand column with the holes in the TV back, and then secure the stand to the TV with four M4 screws.

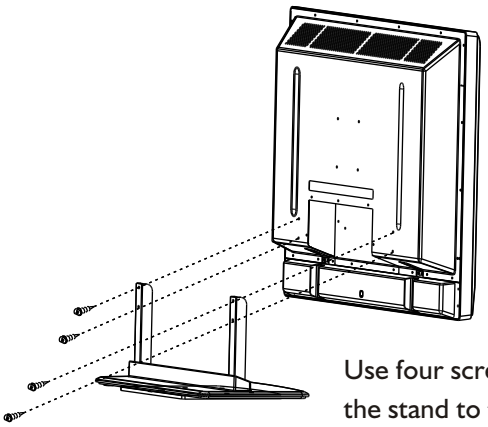

Use four screws to secure the stand to the TV

Note

- **Do not remove the stand from the TV unless using an optional bracket to mount it.**
- The appearance of the unit may differ from the actual one.

WALL MOUNTING INSTRUCTIONS

Safety Precautions:

1. Be sure to ask an authorized service personnel to carry out setup.
2. Thoroughly read this instruction before setup and follow the steps below precisely.
3. The wall to be mounted should be made from solid materials. Only use accessories supplied by the manufacturer.
4. Very carefully handle the unit during setup. We are not liable for any damage or injury caused by mishandling or improper installation.
5. Be sure to place the unit on a stable and soft platform which is strong enough to support the unit.
6. Do not uplift the speaker when moving the display. The appearance of the unit may different from the actual ones.
7. Design and specifications are subject to change without notice.
8. Retain these instructions for future reference.

Note: All the wall mounting parts are optional and may be unavailable in your model.

Below we will show you how to mount the Display on the wall using our company's wall mounting components.

1

Take out these parts from the box.

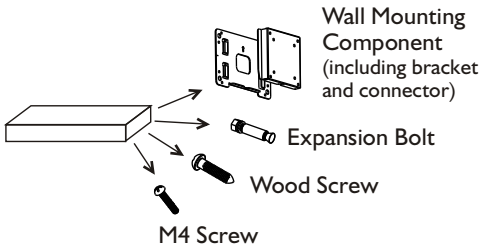

Fig. 1

2

Screw 4pcs expansion bolts to fix the wall mounting bracket on the wall.

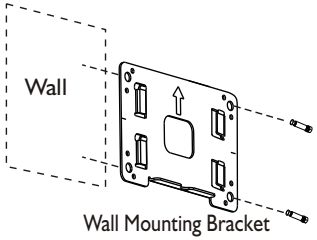

Fig. 2a

If your wall is a wooden structure, please fix the wall mounting bracket on the wall with 8 pcs wood screws.

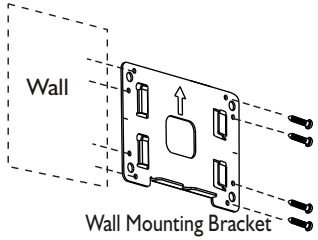

Fig. 2b

3

Use the 4pcs M4 screws to fix the wall mounting connector to the rear of the display unit.

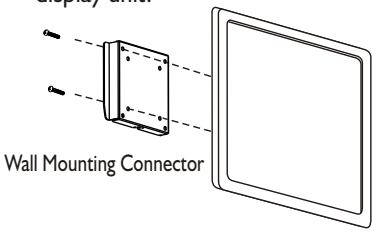

Fig. 3

4

Fully insert the two insertions on the wall mounting connector into the locating grooves on the wall mounting bracket from top to bottom end.

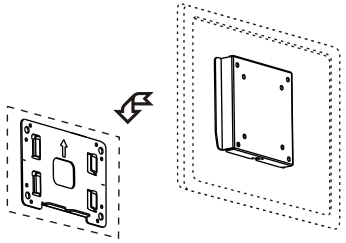

Fig. 4

5

Use screwdriver to revolve the Clasper to the Positioner following the direction of the arrow.

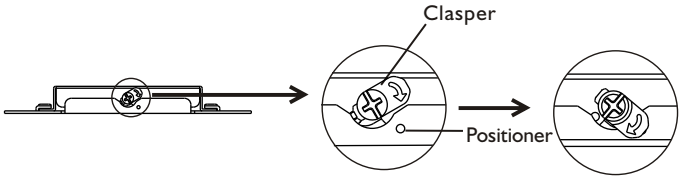

Fig. 5

July/2008

SANYO Electric Co., Ltd.